Binding

CLM - P 275

L

United Kingdom Atomic Energy Authority
RESEARCH GROUP

Preprint

A REPORT ON THE CULHAM SUPERCONDUCTING LEVITRON

D. N. CORNISH

Culham Laboratory
Abingdon Berkshire

1971

CLM-P 275

A REPORT ON THE CULHAM SUPERCONDUCTING LEVITRON

D.N. Cornish

(To be presented at the Symposium on Electro-magnetic
Suspension, Southampton University, 12-14 July, 1971)

ABSTRACT

This machine is being built to study the stability and confinement of a hot plasma trapped in the magnetic field around a levitated superconducting ring carrying half a million ampere-turns.

Superconducting coils up to 1.2 metres mean diameter and using the latest techniques are incorporated in the vacuum system to provide the vertical field.

A brief description of this equipment, concentrating on the superconducting aspects, is presented together with performance data for the coils.

UKAEA Research Group,
Culham Laboratory,
Abingdon. Berks.

June, 1971.

Introduction

The superconducting Levitron being built at Culham Laboratory is an experimental apparatus designed to study the stability and confinement of a hot plasma trapped in the magnetic field surrounding a levitated, current carrying ring. The subject of Plasma Physics is a specialised field in which it is unlikely that many of those attending this Symposium will be familiar. The paper has therefore been written with this in mind and, consequently, concentrates on the problems of producing large magnetic fields with present-day superconductors and touches on the control of a levitated device.

General Description

The machine is built around a room temperature vacuum chamber 1.7 metres diameter, 1.0 metres high which contains all the superconducting coils.

The plasma to be trapped is produced by field ionisation of an injected beam of neutral hydrogen atoms in the region near the levitated ring. Figure 1 shows the layout in greatly simplified form. The toroidal field is generated by water-cooled copper coils shown in diagrammatic form. The total current of 10^6 amps through the vertical central column is supplied from a 5 MW generator.

Filamentary niobium titanium superconductors are used for the vertical field coils and the levitated ring. For mechanical strength and to enable the greater stability of this type of conductor to be utilised, the windings are vacuum impregnated in epoxy resin. This method of superconductor stabilisation enables the cryogenic system to be simplified by the use of gaseous helium whereas previous methods of stabilisation depended on heat transfer to liquid.

Cryogenic System

The large inter-coil forces are restrained by four 'K' arms together with additional struts between the two large diameter coils. In this way the majority of the forces are contained by a structure having a total weight of about 1.25 tons, maintained at about 4^oK. This structure is then supported by a number of inclined tubular supports designed to withstand this weight, the forces due to thermal contraction and torsional forces due to interaction with the toroid field. The bottom ends of these tubular struts are firmly bolted to a strong nitrogen tank having a hinged support mechanism to the room temperature vacuum tank base.

The 4^oK structure is cooled by circulating helium gas through the vertical field coils using a refrigerator system, shown diagrammatically in Figure 2. During the cool-down period advantage can be taken of the high delivery pressure from the cold box. If the pressure is throttled to 2.5 atmospheres, which is the maximum design pressure for the coil cases, it is estimated that the apparatus can be cooled from room temperature in about 5 hours. After cooling the pressure is lowered until it is only just above atmospheric and the coils will operate at a maximum temperature of 4.5°K.

The ring is cooled by conduction from retractable cold clamps through which helium at a maximum temperature of 3.5°K and pressure of 2.5 atmospheres is passed. There are four pairs of indium tipped clamps with a clamping force of 1500 lb per pair hydraulically applied at room temperature. After cooling the ring to the required temperature, each clamp is retracted 25 cm to prevent it interfering with the plasma region.

Levitated Ring

The operating conditions of the ring are very onerous and are listed below -

(a) The mean major diameter is 60 cm and the maximum minor diameter is 9 cm over the case;

(b) The winding is to be capable of operating at up to 0.5 MA turns in a field of 40 kG with a 'reasonable' flight time between successive cool-downs;

(c) The winding must be sealed in a case to prevent contamination of the plasma region in which an initial vacuum of 10^{-8} to 10^{-9} torr is required;

(d) The ring must be capable of withstanding the large electromagnetic forces on it and the shock loading which it will meet if it escapes from the stabilising system and runs into the catching cage.

To meet the first two conditions, a high current density winding is required which must be capable of operation in gas. If liquid were used in a sealed system, a prohibitively high pressure would be developed as the ring is warmed to room temperature. The choice of superconductor to be used was either fine filamentary Nb.Ti or Nb_3Sn tape. There are advantages of both materials and, for the Culham Levitron, it was decided to use Nb.Ti. The biggest constraint imposed by this choice was the small thermal capacity of the ring compared with Nb_3Sn. The critical field and temperature for Nb.Ti are 120 kG and 9.5°K compared with 220 kG and 18°K for Nb_3Sn. This meant that, whilst the maximum operating temperature of the Nb.Ti would be about 5°K, a Nb_3Sn system could be expected to work up to about twice this value. In addition to being able to operate at a higher temperature, the enthalpy of copper at 10°K is 10 times that at 5°K due to the rapid change in specific heat in this temperature region.

A section of a dummy copper winding mounted in a test case is shown in Figure 3. There is a 2.5 mm annular space between the outside of the winding and the inside of the ring case. The winding is held in position by a number of helically applied circular section P.T.F.E. rods which are slightly compressed when the case is closed prior to electron-beam welding the two halves of the case together. This space is subsequently pressurised with helium gas at room temperature to a pressure of 150 atmospheres.

It is the gas which provides the main thermal capacity of the ring, the contribution from the winding and steel case being negligible. Increasing the gas quantity at the expense of winding increases the thermal capacity but increases the current density which reduces any safety factor there may be between working and critical current.

Figure 4 shows the short sample characteristics of the superconductor at a number of temperatures. The load line for the designed winding with a 2.5 mm annular gas space has been drawn in to indicate the position of the maximum operating point. The heat input to raise the ring's temperature is shown as an insert in Figure 5, plotted against the initial temperature of the ring.

There was however a mishap with the first ring and on test it was found that the copper 'leaders' attached to the superconductor for the insulation process had not been removed. The copper, together with symmetrically disposed superconductor, were removed leaving a flat on the inside and outside of the winding and a total of 3461 turns in place of the original 4432. The operating point and thermal capacity using the revised winding are also shown in Figures 4 and 5.

The winding has now been subjected to a number of tests with the leads brought out to a power supply instead of being shorted as in the final arrangement. After four premature quenches, probably due to bedding down in the support structure, the current was raised and held at 160 amps, this being the test level of 10% higher than the maximum working level.

Subsequently the coil was tested in gas - the current was set at the value to give a total of 0.5 MA turns and the temperature was allowed to rise until the coil quenched at $5.5^{o}K$ indicating performance very close to the predicted short sample value.

Assuming reasonable values for emissivity of the ring the time between successive cool-downs, which should not take long to carry out, will be in the region of 1 hour.

Mechanical Properties of the Ring

The ability of the steel case around the ring winding to withstand the room temperature pressure of 150 atmospheres has been checked by pressure tests on spare cases. After early troubles with the welds, the weld on the latest case has remained intact up to 10,000 psi whereas the final case will be tested up to 3,300 psi (50% over pressure).

In the event that the ring escapes from the stabilising system described later, the ring will crash into the catching cage. Its velocity will be considerably reduced if the toroidal field can be switched off quickly enough but, failing this, the velocity is approximately equivalent to dropping the ring on end from a height of 3.5 metres. A preliminary dummy copper winding in its case has therefore been cooled to 77^{o}K and dropped from this height and subsequent examination showed no damage.

Energisation of the Ring

The ring winding is normally short circuited and any current in it must therefore be induced. The plasma behaviour will be studied with a number of field configurations corresponding to a range of currents in the various windings. For each set of conditions it will be necessary to calculate the final flux threading the ring. This will then be generated by the large diameter field coils whilst the temperature of the ring is held above the critical value of 9.5^{o}K by heaters in the cold clamps. The clamps and ring will then be cooled and the flux will thus be trapped in the ring. The current in the outer winding will be brought down to zero and then raised in the opposite direction to the required value. During this process current will start to flow in the ring, its magnitude and direction being determined by the trapped flux and the current in the field coils.

Position and Stability of the Ring

The ring must be positioned with its centre at the centre of the field system. In this position it is in unstable equilibrium with two modes of instability - horizontal and tilt, the decentering forces being very large compared with the weight of the ring. Positioning probes, above, below and in the horizontal plane will be used to monitor its position and move it into the position believed to be correct before it is energised.

After the flux has been threaded through the ring and the ring temperature reduced to make it superconducting, the current in the energising coil is reduced by a small increment. This will cause a current to start flowing in the ring and, if its position is incorrect, forces will be detected on the positioning probes. The probes are programmed to re-position the ring until the force is reduced below a specified limit. This process is then repeated until the desired currents are obtained.

At this stage the stabilising system is switched on. The position of the ring is sensed by photo diodes. Signals are fed through a processing system to power amplifiers which feed nitrogen-cooled copper stabilising coils suitably spaced around the ring. There are four detectors for horizontal movement and four for vertical and tilt movement of the ring. Each detector has two light beams, one on each side of the ring. Each beam is partially interrupted by the ring, the remainder falls on a photo diode. Thus the difference in the two diode outputs gives a measure of ring movement and the sum, which should be constant, indicates whether the detector is working. The system is illustrated in Figure 6. When satisfied that conditions are correct, the cold clamps are removed, then the positioning probes and finally the plasma is introduced.

Vertical Field Coils

There are two pairs of vertical field coils; an inner and an outer set symmetrically placed about the machine's axis. Each coil consists of two epoxy impregnated sections assembled together and welded into a stainless steel case. Figure 7 shows these coils in the assembly stage.

Each inner coil is rated at 900 kA turns and generates a maximum field of 60 kgauss. The overall current density in the winding is 1.56×10^4 amps/cm^2.

Space considerations are not so critical for the outer coils and, because of their size - 1.2 metres mean diameter - and stored energy which is 822 kJ, a higher safety factor has been used in their design. Each coil is rated at 550 kA turns, has a maximum field of 31 kgauss and a winding current density of 10^4 amps/cm^2.

The forces produced by these coils are quite large - for example there is a nett attractive force of 38 tons between the two outer coils even with the 30 cm spacing between them.

Present State of the Project

All the vertical field coils have been made, welded into their cases and tested up to 10% above their working current in gas. In Figure 8 a coil is being inserted into the 1.5 metre diameter cryostat prior to testing. After vacuum testing, the whole assembly of coils including the ring, rigidly located at this stage, will be tested in this cryostat before being assembled in the vacuum chamber using the refrigeration system which is now almost completely installed. Commissioning will be carried out in stages and is dependent on other parts of the equipment, but it is hoped that the ring will be levitated before the end of this year and that physics will commence early in 1972.

ACKNOWLEDGEMENTS

The author is responsible for the superconducting and cryogenic aspects of this machine and wishes to acknowledge the contributions of the other members of the Levitron team and his own staff.

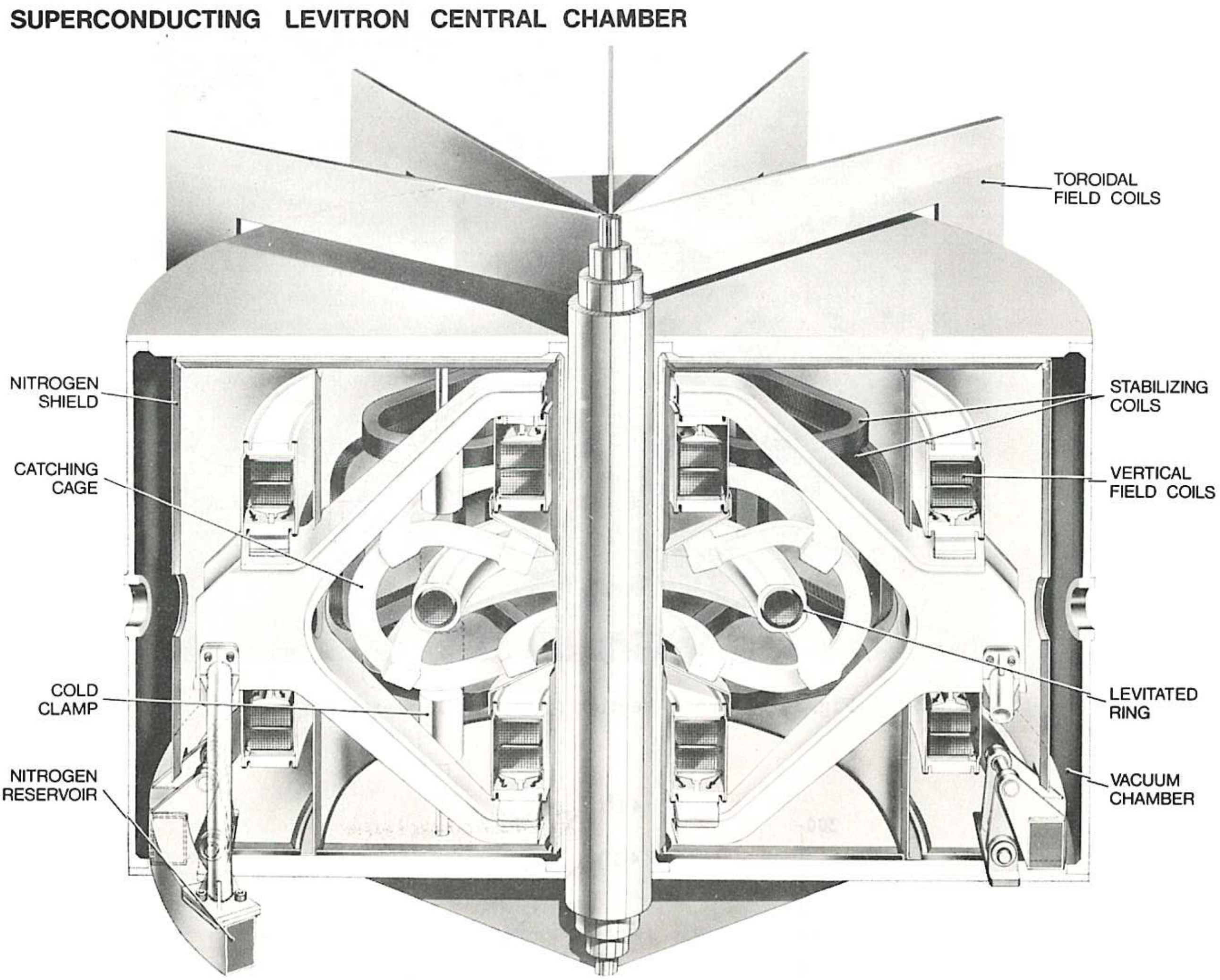

Fig. 1 Illustration of Superconducting Levitron

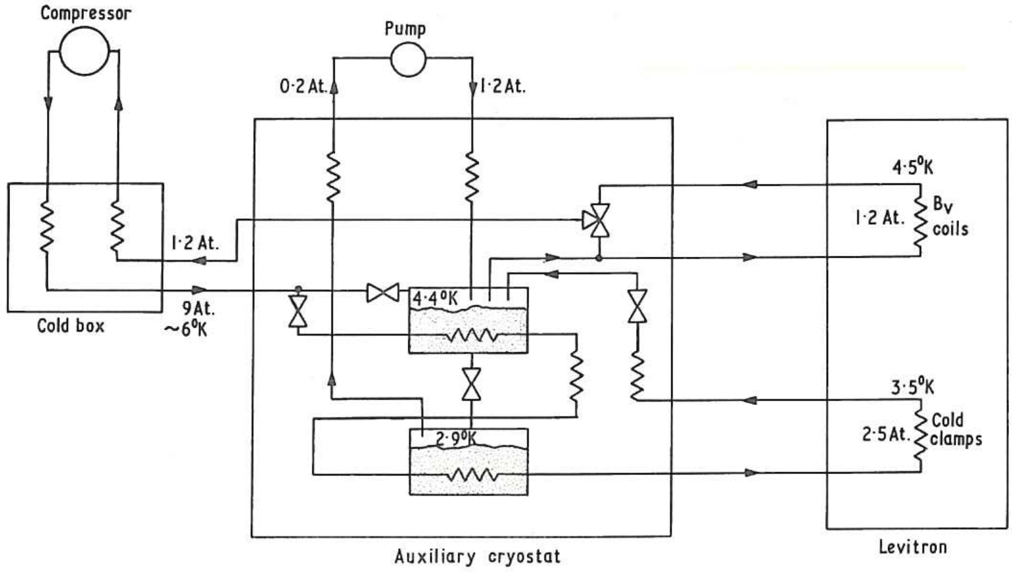

Fig. 2 Simplified cryogenic flowsheet. CLM-P 275

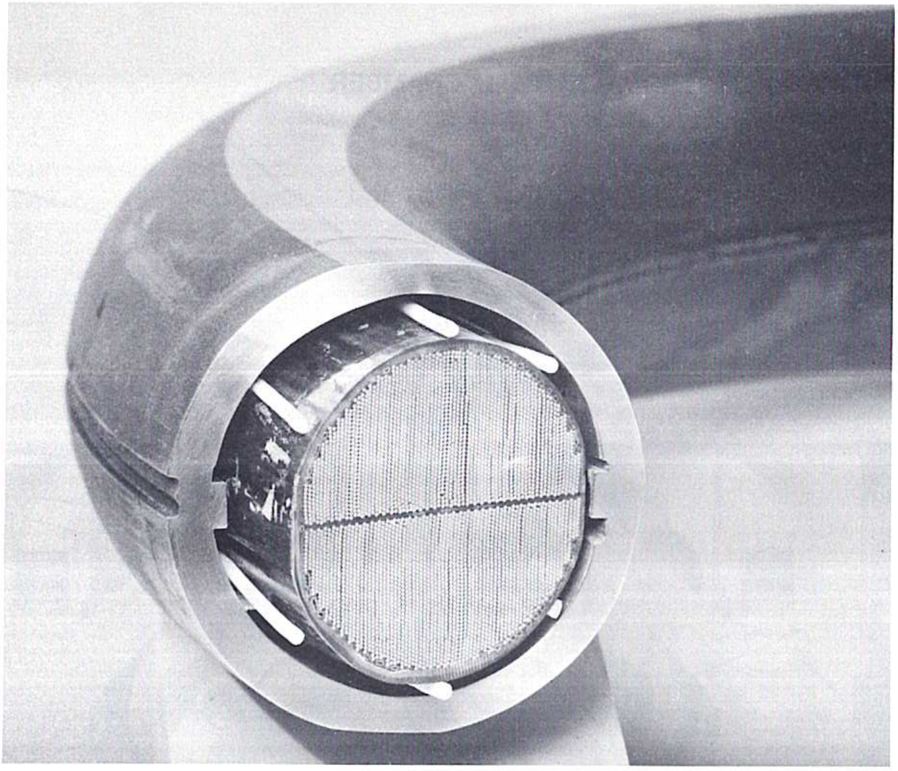

Fig. 3 Cross-section of dummy levitated ring

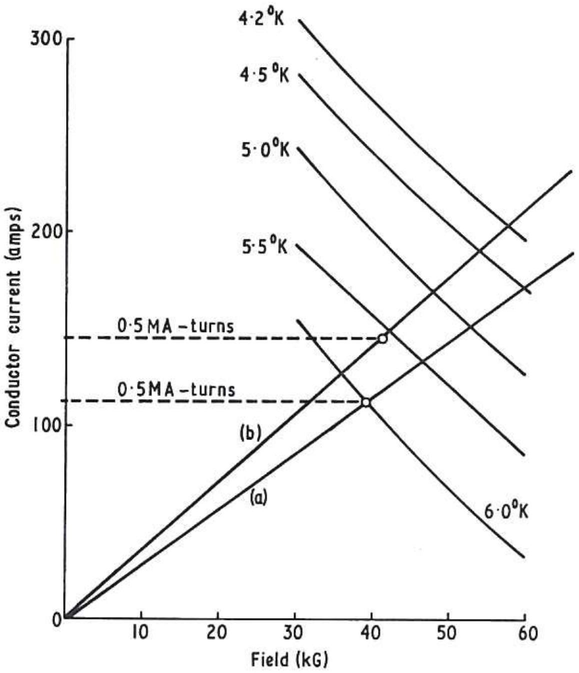

Fig. 4 Short sample characteristics of wire for ring
and (a) load line for 4432 turn winding
(b) load line for 3461 turn winding

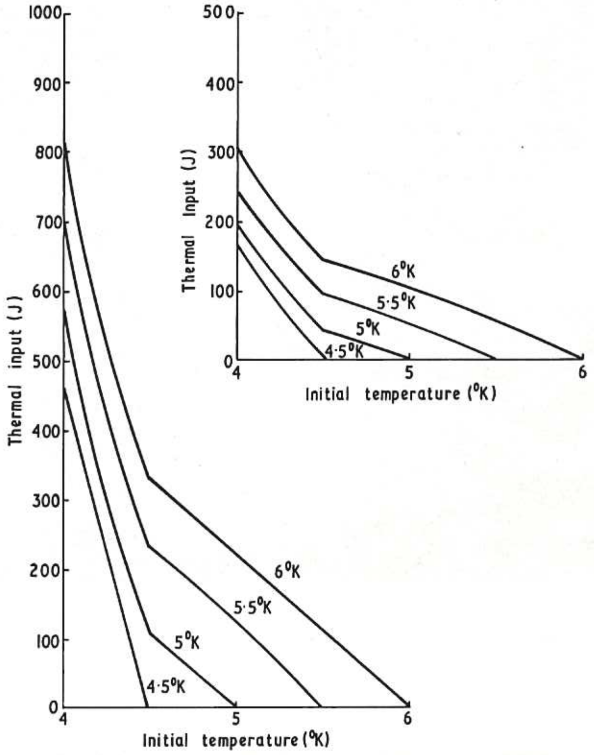

Fig. 5 Final ring temperature as a function of thermal input and intial temperature.

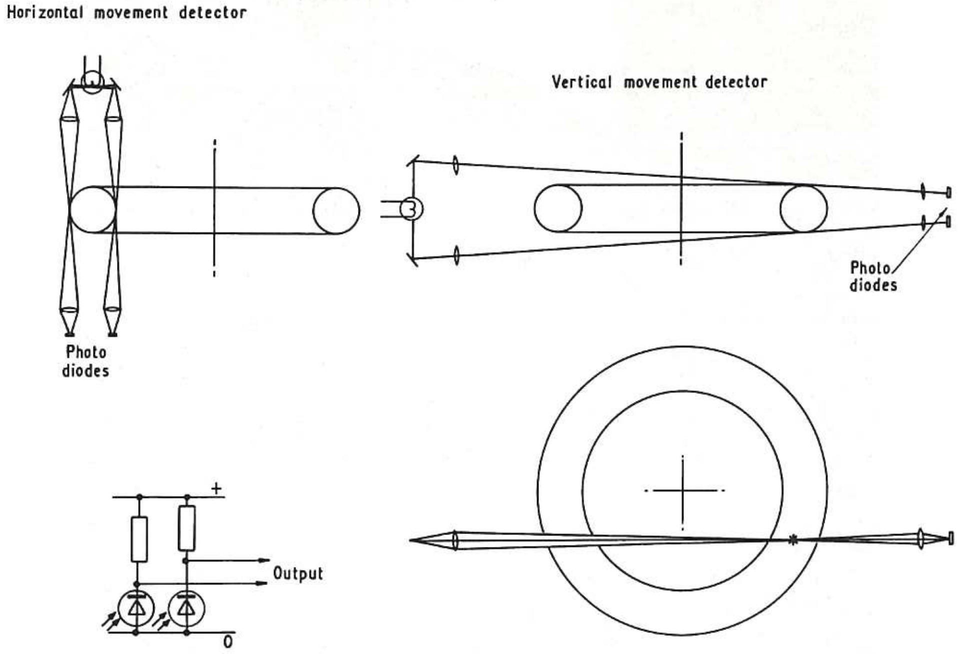

Fig. 6 Ring position sensing system. CLM-P 275

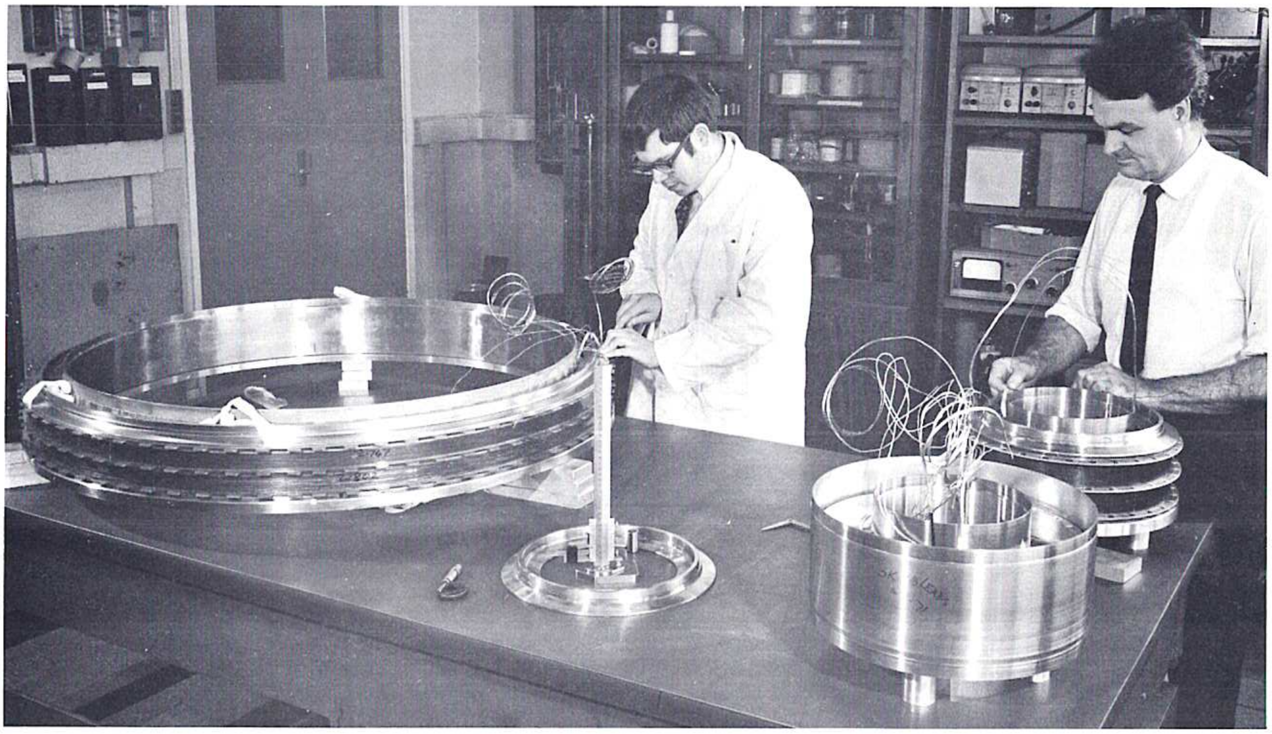

Fig. 7 Vertical field coils being assembled

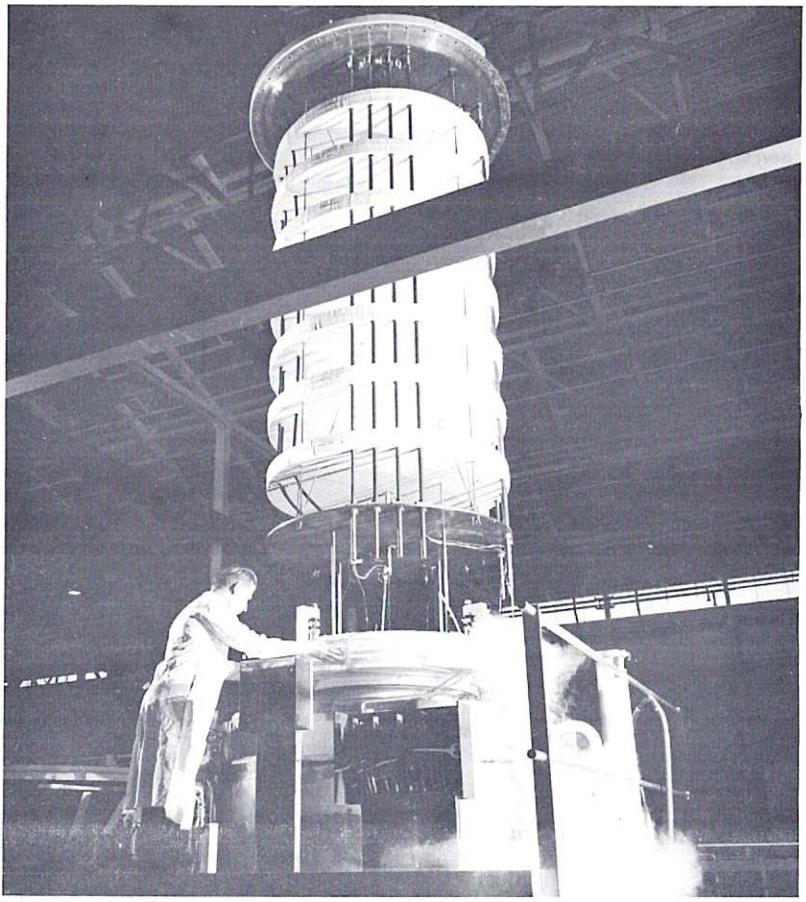

Fig. 8 Coil being inserted into 1.5 metre diameter test cryostat.