CLM-P66

United Kingdom Atomic Energy Authority

RESEARCH GROUP

Preprint

SOME EXPERIMENTS ON A HIGH-POWER CLOSING SWITCH WITH POLYTHENE AS THE MAIN DIELECTRIC

L. L. ALSTON
H. R. WHITTLE
G. A. G. MOSSON
G. C. BARNES

Culham Laboratory,

Culham, Abingdon, Berkshire

1964

UNCLASSIFIED
(Approved for publication)

CLM - P 66

SOME EXPERIMENTS ON A HIGH-POWER CLOSING SWITCH WITH POLYTHENE AS THE MAIN DIELECTRIC

by

L. L. Alston
H. R. Whittle
G.A.G. Mosson
G. C. Barnes

A B S T R A C T

A switch which consists basically of a polythene sheet between two electrodes has closed successfully on pulses of up to 430 kA and up to 170 coulombs, at up to 40 kV. The switch is triggered by a high current discharge from an auxiliary electrode.

The polythene was stressed up to 800 kV/cm, and the closing time of the switch was approximately 2 μs per millimetre of polythene. This time was not affected by the voltage across the switch at the instant of closing.

The position of the main discharge on the electrodes was controlled, and they eroded fairly uniformly over a large area. With Heavy Alloy electrodes the rate of erosion was of the order of 0.1 mm^3 per coulomb-pulse per electrode.

Details are given of an arrangement for replacing automatically the polythene and other expendable parts of the switch.

U.K.A.E.A. Research Group,
Culham Laboratory,
Nr. Abingdon,
Berks.

October, 1964 (C/7 IMG)

C O N T E N T S

T A B L E S

1. Introduction

In thermonuclear research it is often necessary to transfer energy rapidly from capacitors to coils, and to short-circuit coils[1]. This necessitates the use of switches which should satisfy three main requirements.

(1) They must withstand the circuit voltage (generally 10- 100 kV).

(2) Their closing time (i.e. the time between application of the triggering signal and current flow) must be short and repeatable with very small variations. Typically the closing time may be 1 μs.

(3) They must pass pulses of $10^4 - 10^6$ amps, and up to several hundred coulombs. The switch performance must not change appreciably for $10^4 - 10^6$ operations, minor maintenance being permissible every few hundred operations.

For some applications a low switch inductance (10^{-8} Henry say) is also required.

Mechanically-operated switches are usually unsuitable because of their relatively long closing times; consequently gas-discharge switches have been used in the past. The characteristics of low-pressure switches have been reviewed recently by Hancox[2], who concluded that further work was needed to ensure reliable voltage hold-off. High-pressure switches have been described by several workers; the Trigatron[3] is probably the best known, and a comprehensive discussion of another high-pressure switch has been given by Fitch and McCormick[4]. In all gas-discharge switches the arc may damage the electrodes and the insulation by erosion and heating, affecting the voltage hold-off and trigger performance. The rating of high-pressure switches, and of some types of low-pressure switches, is therefore limited to about 10 coulombs per pulse.

Because of the problems encountered with gas-discharge switches, an assessment has been made of a solid dielectric as a switching medium. The dielectric is punctured and must be replaced after each pulse, but it can be stored on rolls and replaced automatically. Solid dielectrics can be subjected to very high stresses if they are required to withstand only one voltage pulse; consequently, the switch may have a relatively small electrode separation, and low

inductance. There are relatively few published data on solid dielectric switches, although they have been used when a very low switch inductance was required. For example, Thornton[5] used a solid dielectric switch in a 10 kV circuit on pulses of 200 kA peak and about 1 coulomb; he triggered the switch by puncturing the dielectric with an explosive charge.

2. Principle of Solid Dielectric Switch

The main features of the switch used in this work are illustrated in Fig.1, and will be discussed with reference to the three requirements enumerated above*.

2.1 Voltage hold-off

Polythene is used as the main dielectric; it was chosen because it has a high electric strength and is readily available. Its intrinsic strength[6] is about 7 MV/cm, but the operating stress must be less, to allow for distortion of the field and imperfections of the polythene. A preliminary experiment showed that 0.5 mm polythene could withstand several 100 kV 1/50 pulses between electrodes with sharp edges, giving a stress of 2 MV/cm. Previous work[7] has shown, however, that in the presence of a large void the stress must not exceed 800 kV/cm if breakdown is not to occur on the first pulse, and therefore the mean stress in the polythene was not allowed to exceed this value.

2.2 Triggering

Although explosives have been used successfully[5], an electrical method was preferred, and the arrangement used was based on a suggestion by W. Millar[8]. Referring to Fig.1, a metallic foil is placed next to the polythene, separated by a pre-punctured insulating sheet from the electrode A. To trigger the switch, the Trigatron is operated and a current flows from the electrode A, through the hole in the trigger insulation, into the foil; if the current is

---

*While this paper was in preparation, Huber[10] published details of a solid dielectric switch for which he used a similar trigger arrangement, and which switched pulses of up to 1 MA and a few coulombs in a 15 kV circuit.

sufficiently high, the polythene is punctured and the switch conducts. The mechanism of puncture is not fully understood but the results presented in this paper are consistent with part of the foil and trigger insulation being vapourised explosively by the trigger discharge current. The resulting pressure sets up stress waves which puncture the polythene even if there is no voltage across the switch. The puncture mechanism may involve also the action of the magnetic field of the trigger current tending to drive the trigger discharge into the polythene.

2.3 Deterioration in service

The main dielectric, trigger insulation, and metal foil are renewed after every operation, and this militates against variability of performance due to ageing. Again, the position of the arc on the electrodes A and B can be changed on successive shots, by altering the position of the hole in the trigger insulation. The electrodes can therefore be made to erode uniformly over a large area. When erosion has become too extensive, the electrode faces are replaced - a relatively simple maintenance operation with this type of switch. It will be shown that several hundred high-current and high-coulomb pulses can be passed before the electrodes need attention.

3. Triggering Experiments

3.1 External trigger electrode

In the first series of experiments the foil and electrode B (see Fig.1) were the main switch electrodes, and A carried only the trigger current. The hole in the trigger insulation was approximately $8 \times 10^{-3} mm^2$ in all experiments described in this section.

Preliminary measurements were made on a switch with 1 mm polythene, 0.05 mm copper foil, and 0.025 mm Melinex trigger insulation. The trigger current was approximately 100 kA peak at 300 kc/s, and the switch was used to discharge a 40 kV capacitor. The breakdown time, defined as the interval between the operation of the Trigatron and the onset of conduction in the switch, was 2.0 μs, with a standard deviation of 0.22 μs on 30 shots. Other experiments showed that the breakdown time was not affected by reducing the voltage

across the main electrodes to as little as 100 volts, or by using polythene, 0.1 or 0.25 mm thick, as trigger insulation. The variation in breakdown time with the thickness of the main dielectric is shown in Fig.2.

The relation between the breakdown time and the thickness of the metal foil is shown in Fig.3. A better understanding of the mechanism of puncture is required for a complete explanation of this relation, but the following are likely to play a part. Decreasing the thickness reduces, in proportion, the energy required to vaporise a given area of foil, and increases the electrical resistance of the foil. Oscillograms taken for 0.025 mm aluminium foils showed that the total resistance in the trigger circuit was about one tenth of that required for critical damping. The resistance had therefore little effect on the current, and consequently the power input, i^2R, to the foil increased as the foil thickness decreased to 0.025 mm. Both the decrease in the power required for vaporisation, and the increase in the power input, tend to reduce the breakdown time, and this is consistent with the rapid decrease in breakdown time with foil thickness which was obtained experimentally down to 0.025 mm. A factor which contributes to the levelling off of the breakdown-time curve for thinner foils, is that further increase in resistance has an increasing effect on the current, and therefore limits the power supplied to the foil.

The effect of varying the trigger capacitor voltage is shown in Fig.4. Decreasing the voltage decreases the instantaneous value of current and therefore the power supplied by the trigger circuit, so that a longer time is required to generate the pressure which punctures the polythene.

Experiments with 0.25 mm polystyrene as the main dielectric gave about the same breakdown time but much greater jitter than 0.25 mm polythene (0.56 μs with 0.16 μs standard deviation on 10 shots, compared with 0.63 μs with 0.05 μs standard deviation on 13 shots).

3.2 Internal trigger electrode

With the switch connections used in the previous section the main current is carried by the metal foil. Reference to Fig.3 shows that the breakdown time increases with the thickness of that foil, which should therefore be as thin as possible. This makes the foil unsuitable for carrying very large currents for long times, and it appears desirable then to use A and B as the main electrodes, the trigger circuit being connected between A and the foil as before.

The results of experiments with this connection have been summarised in Table I. In experiment 1 the hole in the trigger insulation was large and no attempt was made to control its size. Breakdown times were relatively long and very variable, and the switch sometimes failed to trigger when the hole was particularly large. The hole was then decreased to some 5×10^{-4} mm^2, and experiments 2 and 2A show that breakdown times were repeatable, with a mean value of 0.9 μs; this is within 0.1 μs of the value obtained from Fig.2 for the same polythene thickness.

The effect of the constraint applied to the polythene by the electrodes was studied by placing a spacer between the polythene and the main electrode furthest from the trigger, as shown for experiment 3. The spacer had a 5 mm diameter hole concentric with the hole in the trigger insulation. It was found that the breakdown time decreased with increasing spacer thickness, and only results obtained with the thickest spacer have been entered in the Table. This decrease in breakdown time could be due to the fact that when polythene is not supported it punctures more readily under the action of stress waves[9].

When a spacer was placed also at the other electrode the breakdown time increased (see experiment 4). This increase could be due to the fact that the pressure set up by the trigger discharge (see section 2.2) is reduced by the introduction of free space on the trigger side of the switch. Experiment 5 shows that the breakdown time was not affected by increasing the hole in the spacer from 5 to 25 mm diameter, but the standard deviation became greater. This experiment

included an unusually short time (0.45 μs), and if this were omitted the mean breakdown time would be 1.64 μs with 0.216 μs standard deviation. In any event, the increase in hole diameter has a relatively small effect; it appears therefore that the volume into which pressure can be released during the critical time for breakdown is not greater than the free volume provided by the 5 mm diameter hole; consequently the speed of the gases producing the pressure is not much above 3×10^3 metres/second.

It will be seen in section 4 that electrode erosion produces depressions similar to those simulated by the holes in the spacers used in experiments 3, 4 and 5. Consequently, the breakdown time would be expected to increase with erosion. A method of overcoming this increase consists of placing a second copper foil on the trigger insulation, next to the eroded electrode (see experiments 6 and 7). Presumably vaporising the second copper foil during triggering increases the pressure at the electrode, offsetting the effect of the depression.

4. High-current Tests

High current tests were made on the switch shown in Fig.5, using the 'internal trigger' connection of section 3.2. The expendable parts were as in the caption of Table 1, and were replaced automatically using the mechanism described in section 8.2 and illustrated in Fig.6. The position of the hole in the trigger insulation was programmed so that successive shots moved progressively on the electrodes, which therefore eroded fairly uniformly. The electrodes were Heavy Alloy (tungsten-copper-nickel alloy) rails, held in a brass base; other constructional details are discussed in section 8.3. The trigger current was 100 kA at 420 kc/s.

The test circuit is shown in Fig.7, and its operation is described in section 8.1. The voltage acrosss the switch, v_s, and the switch current, i_s, are also given in Fig.7, and it will be seen that the switch begins to conduct after the voltage across it has collapsed.

Most experiments were made with circuit parameters which gave

pulses of 170 coulombs in the switch, with $I_p = 170$ kA and $I_m = 90$ kA (see Fig.7), when the capacitor was charged to 40 kV. The voltage on the capacitor was varied between 15 and 40 kV in different experiments. The inductance, L, was decreased for an experiment at 35 kV which gave pulses of 70 coulombs with $I_p = 430$ kA and $I_m = 230$ kA. The period of the post-switching oscillation was 33 μs in all experiments. The volume of rail removed by different current pulses was estimated throughout these experiments, and varied between 0.04 and 0.2 mm^3 per coulomb-pulse per electrode. The eroded surface had a porous appearance, with no sharp projections.

The brass surround eroded badly if touched by arc roots, and to avoid its erosion shots were not applied near the ends of the rails. Erosion therefore caused the rail surfaces to move away from the insulation, except at their ends. This amounted to the formation of a depression in the electrodes, so that an increase in breakdown time was expected (see section 3.1). In order to assess its extent, 34 operations of the switch were monitored, after it had passed about 700 pulses of 63 coulombs. Because of the relatively slow rate of rise of current (which was determined by the circuit) it was not possible to measure breakdown times as accurately as in section 3, but it was established nevertheless that the breakdown time did not exceed 2 μs on any of these 34 operations.

The mean stress in the polythene was up to 800 kV/cm (the maximum value selected in section 2.1) and no high-voltage punctures occurred. In this particular assembly flashovers occurred occasionally at 40 kV, but not on any of several hundred operations at 35 kV. The voltage rating could therefore be increased by simply increasing the width of the polythene sheet.

5. Conclusions

The data presented above show that the polythene dielectric switch is a simple and robust high-voltage device, with a high current carrying capacity. It has switched satisfactorily pulses up to 430 kA and up to 170 coulombs, and has been subjected to 800 kV/cm without puncturing prematurely. The limiting current and voltage

ratings for this type of switch have not been reached in these experiments.

The triggering time was approximately 2 μs per millimetre of polythene, and for a given polythene thickness this time was independent of the voltage across the electrodes; it was independent also of the trigger insulation material and thickness, but depended critically on the area of the hole in the trigger insulation. With the simple configuration of Fig.1 the breakdown time increases with erosion, but even with heavily eroded electrodes a switch with 0.5 mm polythene closed in less than 2 μs. Techniques for preventing the increase of breakdown time with erosion are discussed in sections 3.2 and 8.3.

With Heavy Alloy electrodes the rate of erosion was of the order of 0.1 mm^3/coulomb-pulse for each electrode.

6. Acknowledgements

The authors wish to acknowledge the many useful discussions which they have had with their colleagues, and particularly with Mr. R. Carruthers, Mr. W. Millar, and Mr. P.J. Rogers. Acknowledgements are due also to Mr. R. White, who was responsible for some of the high-current tests.

7. References

1. Smart, D.L.: 'Some switching problems in thermonuclear research'. Proc. IEE, 1959, 106A, suppl.2, p.107.

2. Hancox, R.: 'Low-pressure gas discharge switches for use in fusion experiments'. Proc. IEE, 1964, 111, p.203.

3. Sletten, A.M. and Lewis, T.J.: 'Characteristics of the Trigatron spark-gap'. Proc. IEE, 1956, 104C, p.54.

4. Fitch, R.A. and McCormick, N.R.: 'Low-inductance switching using parallel spark-gaps'. Proc. IEE, 1959, 106A, suppl.2, 117.

5. Thornton, E.: 'Design and performance of a compact surge generator'. Brit. J. Appl. Phys., 1960, 11, p.265.

6. Cooper, R., Rowson, C.H. and Watson, D.B.: 'Intrinsic electric strength of polythene'. Nature, 1963, 197, p.663.

7. Alston, L.L. and Dawson, P.G.: 'The life of polythene at very high stresses'. Proc. IEE, to be published.

8. Millar, W. Culham Laboratory. Private communication.

9. Kolski, H.: 'Stress waves in solids'. New York, Dover Publications, 1963.

10. Huber, H.J.: 'Wide voltage range high energy solid dielectric switch'. Rev. Sci. Instrum., 1964, 35, p.1067.

8. Appendix

8.1 Test circuit

The circuit used for high-current tests is shown in Fig.7; the polythene dielectric switch was placed at S_2. Both switches are open initially, and C is charged to a voltage V. S_1 is then closed, and the capacitor voltage appears across S_2; it decays approximately as a cosine wave, as shown in Fig.7. The current in L rises as the voltage falls, and when it attains its maximum value I_M, the switch S_2 closes; the coil is then said to be clamped. The impedance of the switch is very low, and will be ignored. At the instant of clamping the current is I_M in both L and L_c, and the voltage on C is nearly zero. The current in L decays after clamping, with a time constant L/R (see Fig.7). The current in L_c oscillates at a frequency determined by L_c and C, and is damped out in a few cycles. The current in S_2 is the difference between the currents in L and L_c.

The charge flowing through S_2 can be much greater than that stored on the capacitor. The post-switching oscillation can be ignored, to a first approximation, when calculating the charge, which is therefore

$$Q = \int_0^\infty I_M e^{-tR/L} = \frac{L}{R} I_M$$

Now

$$I_M \simeq V \sqrt{\frac{C}{(L + L_c)}} \simeq V \sqrt{\frac{C}{L}} \quad \text{if} \quad L \gg L_c$$

Consequently

$$Q \simeq \frac{V}{R} \sqrt{CL}$$

which is $\frac{1}{R} \sqrt{\frac{L}{C}}$ times the initial charge on C.

8.2 Feed mechanism

Fig.6 shows the mechanism for replacing the expendable parts of the switch. The polythene is stored on a roll, and passed over idle rollers, through the switch, and thence to driven rollers. The trigger insulation is on a separate roll with rectangular copper foils stuck to it. The foils are equidistant from each other, and each hole in the trigger insulation is registered with respect to its copper foil. The trigger insulation passes through the switch

into the same driven rollers as the main polythene.

After a switching operation, the lower main electrode is dropped by a compressed-air mechanism, and the rollers draw the polythene and trigger insulation through the switch until a foil contacts a metallic strip connecting it to the trigger circuit. When the foil arrives in that position, the adjacent unused foil touches the sensing contacts (see Fig. 6) which stop the rollers. The lower main electrode is then raised, and the switch is ready for use.

The trigger insulation must not stretch significantly under tension, in order not to change the spacing between adjacent foils. Polystyrene was found suitable in this respect, and was therefore used as trigger insulation.

8.3 Operating experience

Preliminary high-current experiments were made with an electrode assembly which differed from Fig.5 in that there were no holes between the rails, and there was no brass surround on the two sides perpendicular to the rails. The gases generated during conduction then moved along the electrodes to escape at the ends of the rails; in so doing they tore the replaceable belt, making automatic replacement difficult. Satisfactory operation was obtained with the arrangement shown in Fig.5, except when I_p exceeded some 130 kA; at these high currents a relatively large hole was made in the trigger belt, which tore occasionally, due to its catching on the electrodes as it was pulled through the switch. This difficulty should be overcome by opening the main electrodes further - the present opening being only 1/16 - 1/8 inch.

The venting box shown above the upper electrode in Fig.5 was introduced in order to deflect exhaust gases from permanent insulation (not shown in Fig. 5); a similar box was not used on the lower electrode, because its exhaust gases were not directed on to insulation.

It has been explained in Section 4 that erosion produces a depression in the electrodes. This depression could be largely eliminated by having the brass surround clear of the Heavy Alloy

rails, which could then erode right to their ends. A compressible pad would be placed between the brass surround and the copper strip (see Fig. 5). Compression of the pad would ensure that the rails remain in contact with the insulation as they erode. The pad would also improve the gas seal at the electrode edges; with the present arrangement it is possible for carbon to escape at the edges, and to become deposited on the permanent insulation shown in Fig.5. The deposition of carbon was greatly reduced by blowing air continuously through the venting box.

TABLE 1

EXPERIMENTS ON A SWITCH WITH INTERNAL TRIGGER

Main insulation: 0.5 mm polythene. Foil: 0.025 mm copper.

Trigger insulation: 0.075 mm polystyrene, with 0.0005 mm^2 hole (except as stated in Exp. 1).

Trigger current: 64 kA peak at 670 kc/s.

The switch was used to discharge a capacitor charged at 220 volts (± 20 volts).

No.	Configuration	Differences from conditions given in caption	Mean breakdown time (standard deviation, minimum and maximum values, and number of shots are given in brackets)
1	see Figure 1	Hole in trigger insulation greater than 30×10^{-3} mm^2	Breakdown time very variable (1 - 10 μs). Occasional failures to trigger.
2		None	0.87 μs (0.13 μs, 0.7 - 1.15 μs, 7 shots)
2A		None	0.94 μs (0.10 μs, 0.8 - 1.05 μs, 7 shots)
3	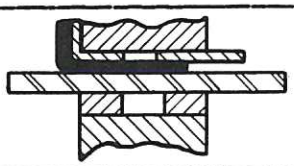	0.46 mm thick spacer with 5 mm diameter hole at one electrode	0.73 μs (0.13 μs 0.62 - 1.05 μs, 10 shots)
4	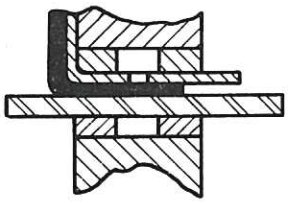	0.5 mm thick spacers with 5 mm hole at both electrodes	1.50 μs (0.29 μs 1.0 - 2.05 μs, 10 shots)
5		As experiment 4, but hole diameter increased to 25 mm	1.51 μs (0.41 μs, 0.45 - 1.9 μs, 10 shots)
6	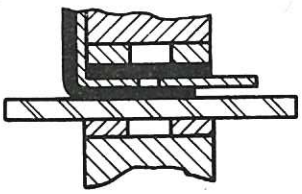	As experiment 5, but 0.025 mm copper foil on both sides of trigger insulation	1.01 μs (0.078 μs, 0.92 - 1.16 μs, 10 shots)
7	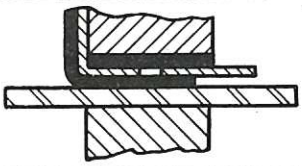	As experiment 6, but smooth electrodes	1.01 μs (0.11 μs, 0.82 - 1.16 μs, 10 shots)

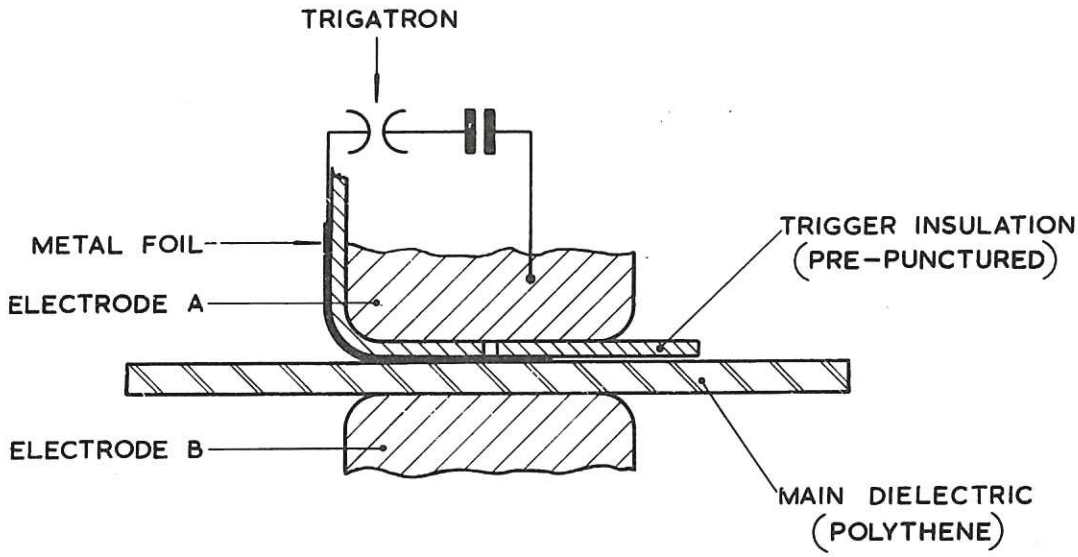

CLM-P66 Fig. 1
Sketch illustrating the principle of the switch

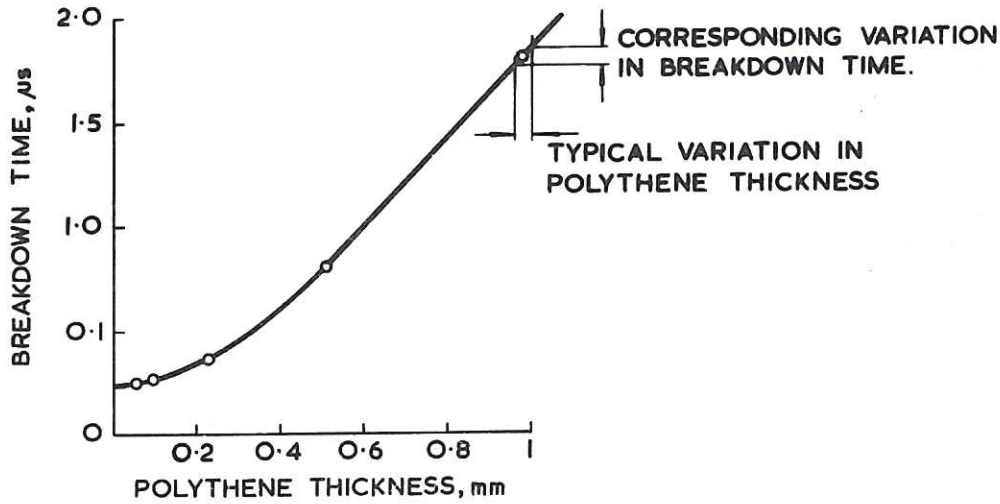

CLM-P66 Fig. 2
Effect on the breakdown time of the thickness of the polythene used as the main dielectric. 0.025 mm copper foil electrode, 0.025 mm melinex trigger insulation. 100 volts across main electrodes. 20 kV, 1 μF trigger capacitor, giving 85 kA peak at 0.8 Mc/s

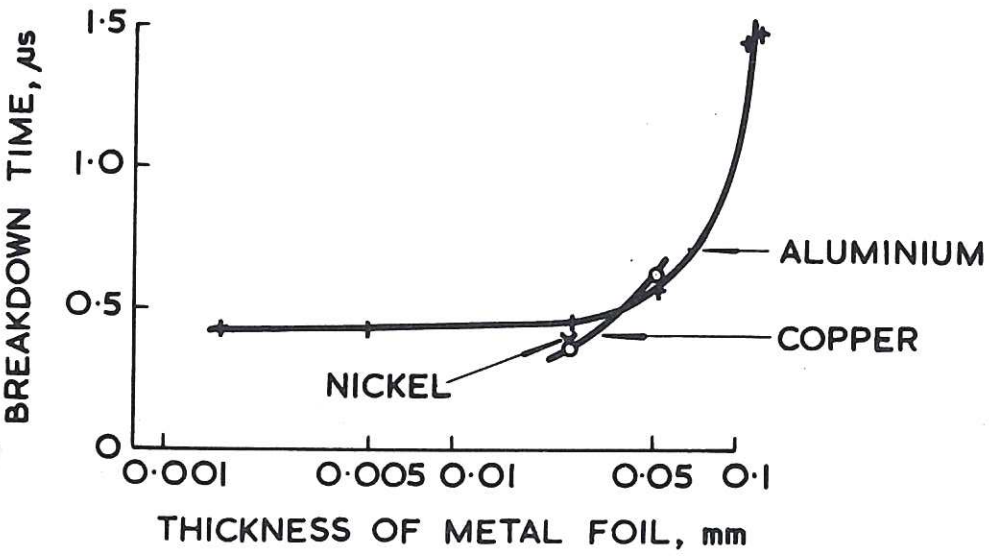

CLM-P66 Fig. 3
Effect on the breakdown time of the thickness of the foil electrode. 0.25mm polythene main insulation. 0.025mm melinex trigger insulation. 100 volts across main electrode. Trigger circuit as for Fig. 2

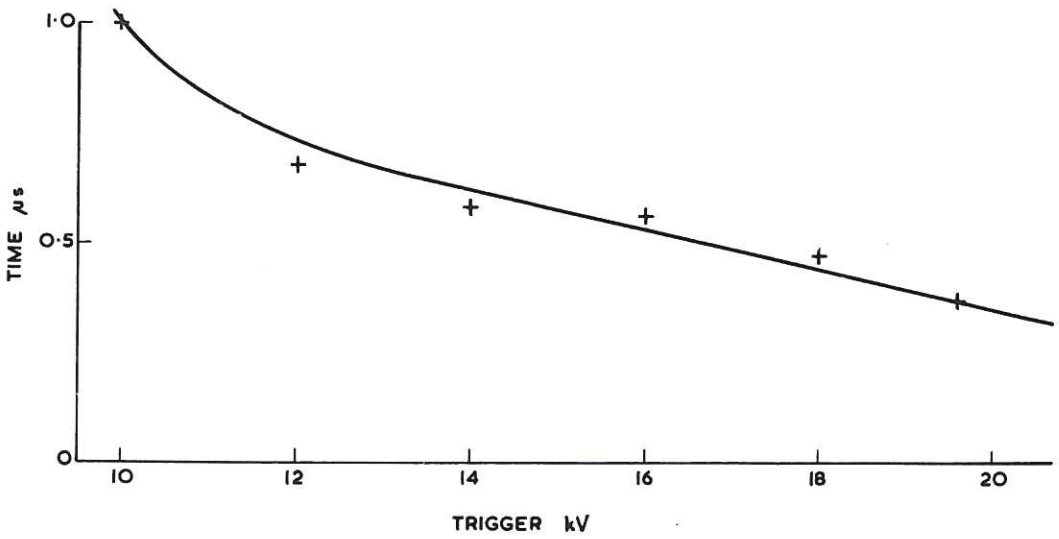

CLM-P66 Fig. 4
Effect on the breakdown time of the trigger capacitor voltage. 0.25mm polythene main insulation. 0.025mm melinex trigger insulation. 0.025mm copper foil. 100 volts across switch Trigger circuit as for Fig. 2

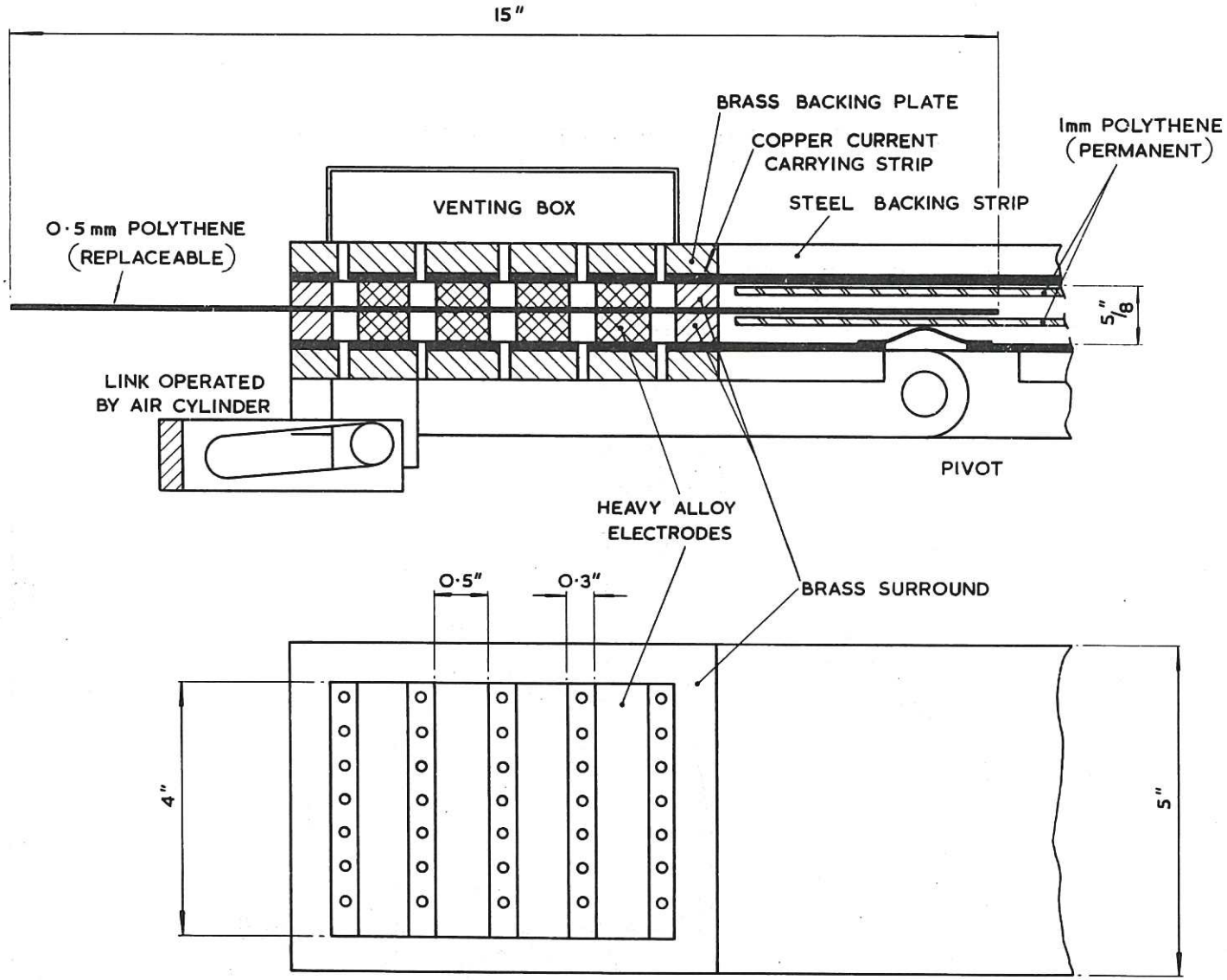

CLM-P66 Fig. 5
Main features of switch used for high-current tests. Sectional elevation and part plan (bottom electrode only).
Trigger components omitted

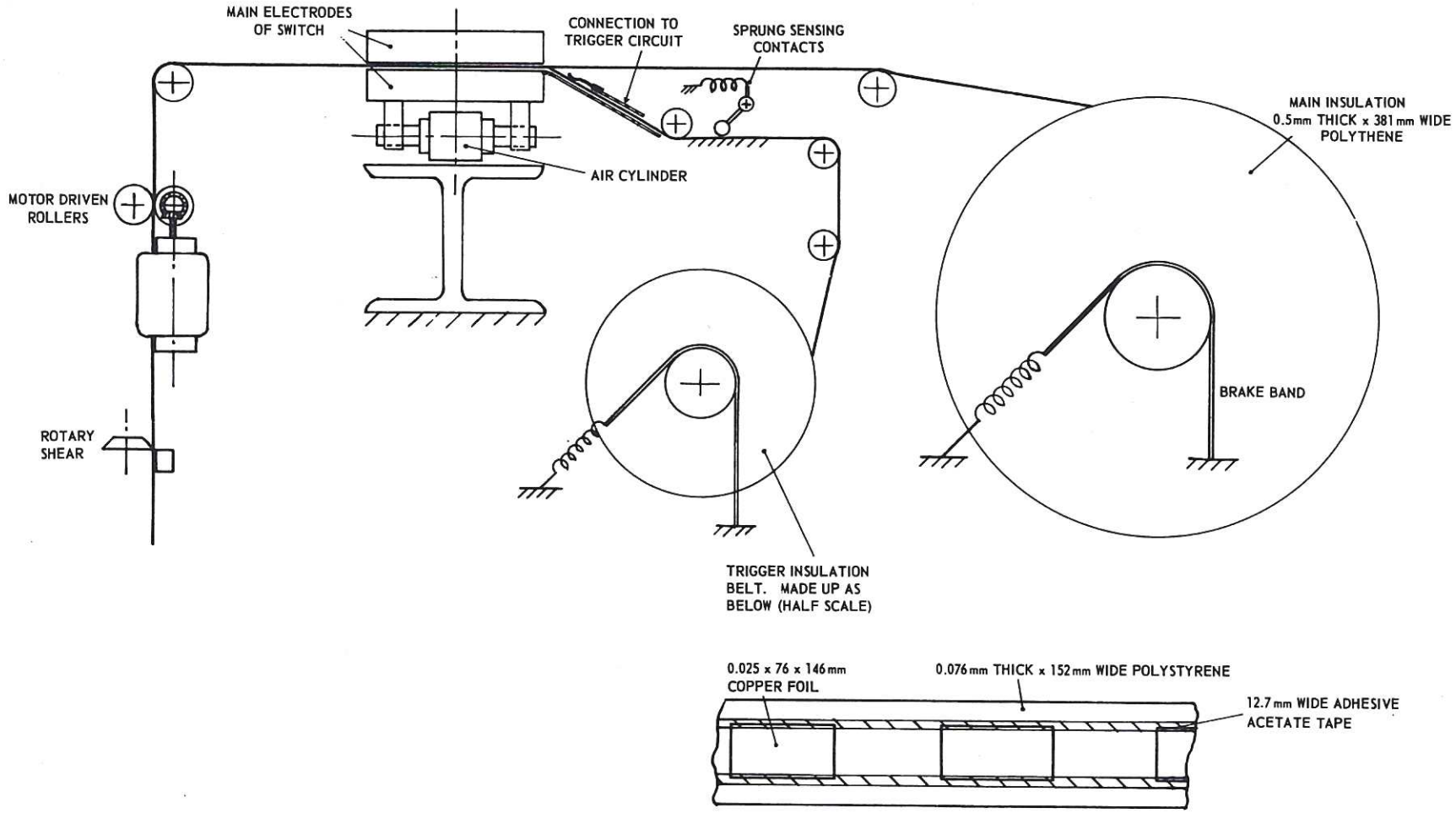

CLM-P66 Fig. 6

Switch with automatic feed mechanism. Trigger circuit not shown

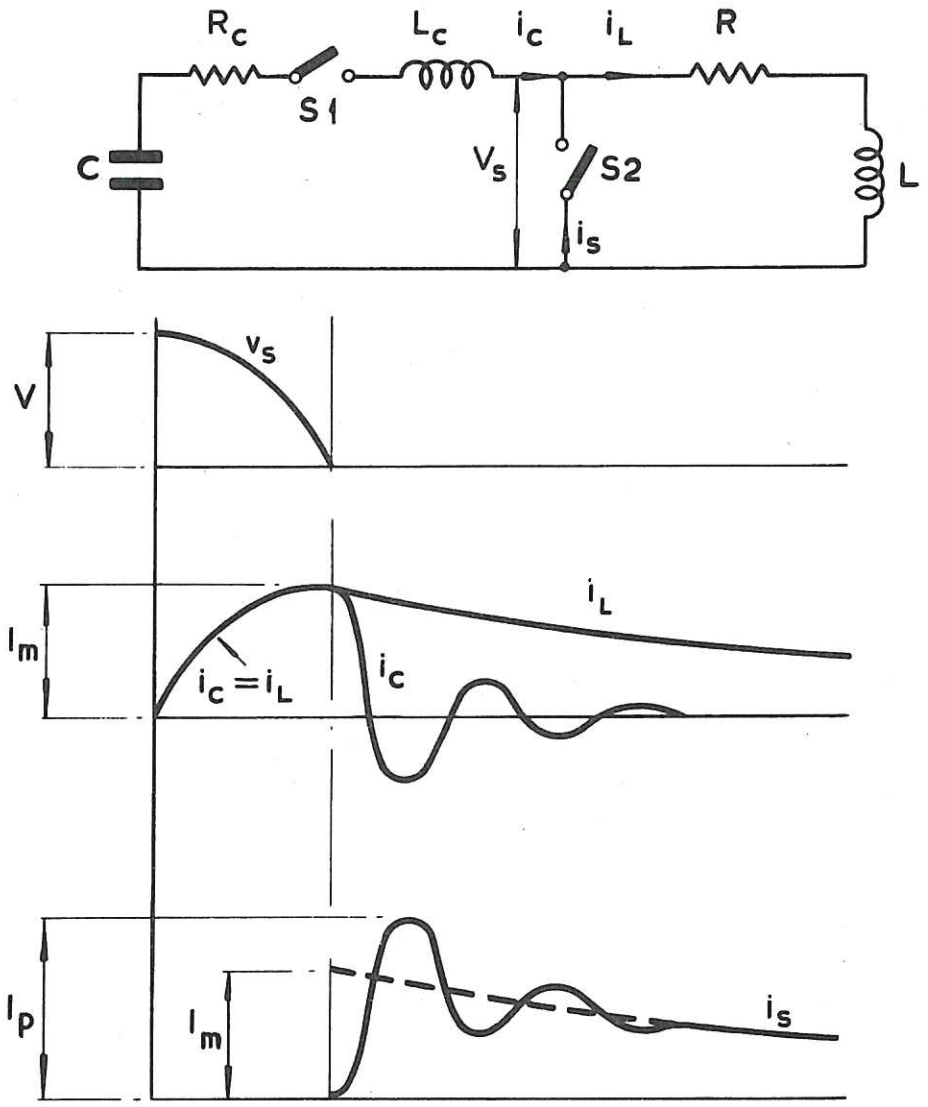

CLM-P66 Fig. 7
Test circuit and sketches of waveshapes for high-current tests. S_2 is the switch under test