CLM - R 174

CLM - R 174

UKAEA

Report

THE FEASIBILITY OF REMOTELY SEPARATING AND REJOINING THE MAIN COOLANT PIPES OF A FUSION REACTOR

D A BRIARIS
J R STANBRIDGE

CULHAM LABORATORY
Abingdon Oxfordshire

1977

Available from H. M. Stationery Office

C/18

£1.50

CLM-R 174

THE FEASIBILITY OF REMOTELY SEPARATING AND REJOINING THE MAIN COOLANT PIPES OF A FUSION REACTOR

D.A. Briaris
J.R. Stanbridge

Associated Nuclear Services, Epsom, Surrey, UK

ABSTRACT

The generic requirement of a fusion reactor that the first wall and other high neutron dose structures be periodically replaced gives rise to a number of complex engineering operations which need to be performed remotely and with a high degree of reliability. Techniques for the remote separation and rejoining of the helium coolant pipes on the Culham Conceptual Tokamak Reactor Mk. II have been investigated in the form of cutting and welding schemes and the use of a mechanical coupling. A mechanical coupling is the more attractive because the reduced complexity of the operations to separate and join the pipes potentially shortens the reactor down-time. Some assessment of remote joint examination and recovery from faults has also been made.

* Work carried out by Associated Nuclear Services under Culham contract no. M1A 81064

UKAEA Culham Laboratory,
Abingdon, Oxon, UK.
(Euratom/UKAEA Fusion Association)

September 1977

SBN 85311 0557

C O N T E N T S

TABLES

FIGURES

1. INTRODUCTION

A common feature of fusion reactor studies (Ref. 1, 2 and 3) is the requirement for reactor servicing including the replacement of the blanket structure using remote handling. This is a generic problem, independent of the plasma confinement principle of the reactor. It is a consequence of the conflicting aims of a reactor economic life of about 30 years and a first wall limiting dose of approximately 10^{29} n/m^2 which it is estimated will limit the useful life of the breeding blanket to about 2 full-power years at economic wall loadings.

Fusion reactor applications are for electricity generation probably by a steam cycle in which a coolant will be employed to transport heat from the blanket to steam raising plant. Possible reactor coolants include lithium which will have to be present in the blanket in some form for breeding tritium, and gases such as helium. There are strong arguments in favour of helium on account of its inertness, its transparency to neutrons, it has no interaction with the magnetic field and it can easily be removed from or replaced in a coolant circuit which has to be opened for regular servicing operations.

In one of the studies (Ref. 1) in which servicing requirements were considered it became clear that a major operation in the replacement of a blanket sector is the parting and rejoining of the coolant pipes connecting the breeding blanket to the steam generators. Remote handling will be necessary and therefore simple operations are essential. In the present study, the technologies available for pipe parting and rejoining on a timescale considered appropriate for the development of fusion reactors are investigated, both for mechanical joints, and welding and cutting. The

study considers the requirements for the joint in the coolant pipes and the conditions under which the work would be carried out, and finally makes a judgement on the methods most likely to meet them.

2. REQUIREMENTS RELATING TO THE COOLANT PIPE JOINT

2.1 Replacement operation

We have identified a number of requirements as the basis of a specification of the pipe cutting and joining operation of blanket replacement. These are basically generic in nature but in this study they are related to the Culham Conceptual Tokamak Reactor Mk. II (Ref. 1 and 2), which is illustrated in Fig. 1.

2.1.1 Frequency and duration

The arguments for the replacement of the blanket structure are well established and indicate that the service life will be about 2 years (Ref. 2). The design philosophy is to minimise the reactor shutdown time for replacement and to plan shutdowns at times of low electricity demand, for example during 60 hour periods over weekends. The reactor concept enables the individual replacement of each of the 20 blanket sectors so the required interval between replacements on this basis is about 4 to 6 weeks. A consequence of the proposed weekend shutdown period is that the duration of each coolant pipe parting or rejoining operation should be less than 5 hours (Ref. 1).

2.1.2 Reliability

It follows from the above that there will be about 300 sector replacement operations during one reactor lifetime. The penalty in the cost of alternative electricity generation,

if the replacement operation is not completed in time, may be high, so that sector replacement must be a reliable operation. Furthermore, means must be provided to recover from faults during replacement. These considerations require reliability and thus simplicity as far as possible both in the servicing machines, and in the operations required of them.

2.1.3 Remote handling working environment

Shutdown dose rates in the middle of a length of stainless steel blanket structure will exceed 10^6 rad/h, and will be about 10^3 rad/h in the immediate vicinity of the joint in the coolant pipe. These dose rates dictate that remote handling machines and processes must be used.

The ambient temperature adjacent to the joint under operating conditions is about 350°C, and under reactor shutdown servicing conditions, about 200°C. To control tritium release the ambient pressure under both operating and shutdown conditions will be sub-atmospheric, say $\leqslant 10$ torr.

The location of the joint inside the vacuum boundary in a space bounded by the inner and outer shield structures and by adjacent toroidal field coils imposes additional limitations on the handling methods used. The major radius of the torus is minimised for economic reasons and the competing requirements for the space available in addition to servicing include the neutron shielding, thermal insulation of the coolant pipe and access for injectors and divertors. From preliminary layouts of this area we have concluded that it is reasonable to assume a radial distance of 0.5 m around the coolant pipe for the joint itself and for access to the joint, this should extend about 1.5 m above and below the joint plane.

2.1.4 Inspection and testing

The remaking of the coolant pipe joints must be carried out in accordance with approved engineering procedures and codes including inspection and testing at relevant stages in the work to ensure that the completed joint conforms to the required standards. The inspection and test procedures will have to operate in the extreme environment of the servicing operation.

2.2 Coolant pipes

The following have been taken to be reasonable upper limits to the coolant pipe design parameters:

reactor sector output	250 MWt
helium outlet temperature	750°C
gas temperature rise	400°C
coolant pressure	6 MPa
maximum helium velocity	60 m/s
hot pipe diameter	0.95 m

On the basis of these parameters, the pipe sizes considered in this study are in the range 1 to 2 m diameter and 38 to 62 mm wall thickness, the largest sizes being for concentric pipe arrangements as described below.

Some thought has been given to the possible layout of the pipes and their design where they may interact with the separating and rejoining operations. There must be at least one supply and one return pipe between each sector and its associated steam generator which may be above or below the reactor. The pipes should be kept as short as possible and the layout should minimise direct neutron streaming from the blanket to operator areas or sensitive structural components. It should also accommodate the differential thermal expansion between the sector and the steam generator.

The coolant pipes should be designed for the reactor lifetime but the low permissible stresses at 750°C even in high temperature alloys mean that it is advantageous to reduce the pressure pipe wall temperature. This can be achieved by using a concentric pipe arrangement with the hot outlet pipe inside and insulated from the cold inlet pipe, Fig. 2. This has the advantages that the inner high temperature pipe is not supporting the full coolant pressure, it can tolerate a lower standard of leak tightness, and may even eliminate problems of differential thermal expansion between the pipes. The diameter of the outer cold pipe in this arrangement would be about 1.5 m. The general principles of construction and of branching the main pipe to individual cells which are shown on Fig. 2 are considered to be feasible.

In this study it is assumed that either a concentric pipe arrangement is possible or that in the case of a two-pipe system the wall of the hot pipe is thermally insulated from the hot gas and operates at the same temperature as the inlet pipe. In the concentric arrangement, Fig. 2 it is believed that the inner pipe can be removed through the access port by fairly straightforward mechanical methods.

The coolant pipe joint is inside the vacuum boundary and helium leaking from the joint will be removed by the vacuum pumping system. As a guide to the maximum permissible leak rate we have assumed that the total helium leakage from the coolant systems into the vacuum space should not exceed the helium production rate in the plasma, that is about 40 g/day per sector. Allowing for leakage from the coolant distribution pipework, the leakage rate from the main coolant pipe joint should not exceed a few grammes per day.

3. PIPE JOINT SCHEMES

3.1 Mechanical joints

Mechanical joints are attractive in principle because compared to the alternative of cutting and welding, the service operations are simpler and hence may be expected to be both quicker and more reliable. The duty required from the joint in terms of the combined diameter, internal pressure, operating temperature, and leak tightness is not significantly in advance of that achieved to date by some 'Grayloc' coupling designs, see Table 1.

3.1.1 Clamping concept

In the Grayloc design a 'V'-section clamping ring engages with mating tapered surfaces on flange hubs welded to the pipe ends, see Fig. 3. The clamping ring is a link mechanism which is drawn into contact with the hubs by a tangentially operated screw. The radial space required to open the clamp sufficiently to clear the hubs can be reduced by increasing the number of clamp segments and linking these segments using hinges, see Fig. 4.

Only radial motion of the clamp segments is useful because circumferential motion results in frictional forces which prevent uniform clamping taking place. The clamping and opening movements are controlled by guide slots in a plate attached to one of the flange hubs, Fig. 5, and a restraint known as the clamp retaining can, Fig. 4 and 6. This principle of a segmented clamping ring has been successfully applied to the primary helium coolant loop of the Fort St. Vrain HTGR in the form of couplings up to a 1.6 m inside diameter with a clamping assembly made to operate with only 25 mm radial movement, see Table 1.

3.1.2 Seal design

Flat face, or gasket seals require considerable pre-load in the tightening bolts in order to balance the pressure forces, resulting in excessive stresses in the clamp components. The joint then becomes sensitive to additional stresses due to bending which increase the likelihood of unacceptable leakage.

The alternative seal which is used in the Grayloc design consists of a specially shaped seal ring, Fig. 3, which seats on the tapered pipe bore and seals by the combination of contact pressure due to elastic deformation of the seal and the action of the gas pressure itself. It requires only 5 to 10% of the axial loading of a flat-faced seal. Fig. 6 shows a possible development which could be used to join simultaneously the two pipes of a concentric pipe arrangement, using only a single clamp. The inner pipe of this arrangement is located both radially and axially by supports between the pipes as shown.

3.1.3 Assembly and performance

Fig. 7 shows diagrammatically a mechanical coupling incorporated in the coolant pipeline. In the open position the clamp configuration of Fig. 6 would not allow sufficient axial clearance for withdrawal of the sector, but by locating a bellows assembly in the pipeline, additional clearance can be gained by compression of the bellows. Alternatively the clearance required could be obtained by lowering the sector. The minimum alignment requirements for flange assembly are ≃10 mm radial offset and flange gap (see Table 1), and would seem to be achievable, with due allowance for the dimensions of the pipe and the sector.

The likely helium leakage from a 1.5 m inside diameter chain clamped coupling cannot be determined without further development work and testing. The seal ring contact pressure increases with increasing gas pressure in the pipe and results in constant or even reduced leakage, provided that flange deformation is limited. Thus the leakage rates for large diameter low pressure couplings now in service may well be applicable to similar couplings at higher pressures. This suggests a leakage less than 0.0015 g/d per joint which is <0.1% of the assumed permissible leakage. Further design development may be required in order to determine the best technique for carrying out the leak test. One method would be to repressurise the system and then to monitor the leakage flow into the interspace created by incorporating a second seal into the outside flange seal face. The effect of thermal cycling on the seal ring lips may reduce the effectiveness of the seal. However couplings in use are repeatedly cycled over a temperature interval of 900°C for 20 min periods without failure (Ref. 4).

3.2 Welded joints

A well executed full-penetration welded joint offers absolute structural integrity and may have the advantage compared to a mechanical coupling, of a reduced space requirement. The results of a preliminary review of welding methods, summarised in Table 2, indicated that both electron beam and laser welding warranted detailed investigation and two schemes based on these are described below.

3.2.1 Electron beam welding and plasma-arc cutting

Plasma-arc cutting followed by electron beam welding is an attractive scheme which makes use of present-day technology. The plasma-arc process is suitable for cutting stainless steel up to 90 mm thick using remote

control (Ref. 5 and 6). The arrangement of Fig. 8 shows schematically a cutting torch on a circular track located off a fixed flange machined parallel to the joint face. The subjective estimates of the duration of the principle operations in Fig. 8 indicate a total time of 5 h for cutting the pipe. Cutting can be performed sufficiently accurately to leave only a minimum amount of further surface preparation prior to the welding operation. Problems which might require some development are the initial penetration of the pipe wall if it is more than 30 mm thick, and the control of splatter produced during the cutting operation.

Electron beam welding lends itself to both automation and remote operation (Ref. 7), and is applicable to the coolant pipe joint, see Table 2. Pipe mating surfaces need to be prepared parallel with a gap not exceeding 0.125 mm and have a fine and clean surface finish achieved by machining, to produce a high quality weld.

Data already exists on the control of defects in electron beam welds on types 304 and 316 stainless steels which show that defects can be eliminated by the proper control of positioning and welding parameters. The incidence of porosity, which has occurred on occasions, is eliminated by oscillating the beam during the welding operation to assist the easy dispersion of gas. Weld repairs can be carried out by suitable rerunning of the affected part of the weld, but with automatic sensing of the weld position and proper control of the automatic welding conditions these are unlikely to be necessary.

Fig. 9 shows a scheme which employs a 'bracelet' type machine located around the replacement sector pipe and positioned prior to the sector being moved into the reactor hall. After mating the two halves of the joint the machine is elevated by the jacks and clamps the upper pipe to control

distortion during the welding operation. The machine contains machining, cleaning, welding and testing facilities which are guided around the outside of the pipe, the joining operation being performed using a local vacuum technique without access to the inside of the pipe. The 35 kV welding head can be accommodated in the 0.5 m annular space of the housing. In view of the restricted space, the bracelet machine would have to be constructed in separate segments, for removal after the rejoining operation.

Fig. 10 shows an alternative scheme also employing a local vacuum technique, using a service machine lowered down the inside of the fixed outer pipe after removal of the inner pipe via the access port (see Fig. 2). The main attraction of locating the pipe cutting and joining equipment inside the pipe is the need for only a minimal outer clearance. Problems likely to be encountered include ensuring reliable location of the machine, complete removal of all the machining swarf, and making effective vacuum seals.

Post-weld heat treatment is not required but the welded joint requires inspection to the standards prescribed by the appropriate engineering code. The background radiation level in the vicinity of the joint one day after shutdown will be about 10^3 rad/h; hence radiography is not possible and the only suitable method of examination of the pipe weld is by ultrasonic testing. Fully automated and remotely operated ultrasonic systems are already used for inservice inspection of fission plant components subjected to similar background radiation level but at lower temperatures (Ref. 8, 9 and 10). Further work is necessary to develop a suitable wet or dry couplant to work at the temperature of about 200°C and to meet the requirements for vacuum cleanliness. The low heat input which accompanies the electron beam welding processes maintains a fine grained structure in the fused zone of the weld, which is conducive to obtaining

reliable results from ultrasonic testing. The data obtained from ultrasonic testing would be processed to give immediate indication of the need for and location of any weld repair required, before removal of the welding machine.

A weld which passes the ultrasonic examination should also satisfy the leakage requirements. Nevertheless, the importance of maintaining a low helium leak rate may result in a requirement for leak testing. Current practice would also make a pressure test necessary. This could only be carried out after refilling with helium. Mass spectrometers which can detect helium leakage rates as low as 10^{-5} std mm^3/s are available but the techniques for applying these to the joint would require development.

3.2.2 Laser beam welding and cutting

An alternative cutting and welding technique utilising lasers may become possible on the fusion reactor timescale. Continuous high power carbon dioxide lasers are used for both cutting and welding and the present state of development is indicated in Table 3. Work is currently in progress at Culham Laboratory in a number of areas including developing techniques for the automatic and remote cutting of Prototype Fast Reactor fuel element wrapper tubes, and development of a high power laser (about 30 kW).

Cutting the coolant pipes with a laser beam is not currently feasible since penetration is limited to about 40 mm in stainless steel, but it is hoped that further development of laser technology may increase this penetration. The laser beam has the advantage of being easily transmitted through the air and being unaffected by magnetic fields.

Laser beam welding of stainless steel using a 15 kW continuous wave laser is limited to sections up to 20 mm thick (see Table 3). Deep penetration welding is

accompanied by the production of ionised metal vapour within the molten cavity which may attenuate and dissipate the focused beam thereby imposing an inherent limit on the maximum thickness of material which can be welded. Assuming that future development will overcome this problem, Fig. 11 has been drawn to show a possible outline arrangement of a laser cutting and welding head as it might feature in a pipe servicing scheme. The laser beam would be transmitted from a source external to the reactor hall using mirrors, and finally focused on to the pipe surface. In addition to the equipment shown facilities would also be required for performing a machining operation on the end of the fixed pipe, and for locating and aligning the pipes prior to welding, as described for the electron beam welding scheme. Inspection of a laser weld would be by ultrasonic techniques, as also described above.

4. COMPARATIVE PERFORMANCE OF THE PROPOSED SCHEMES

Subjective estimates of the times for the separating and rejoining operations are shown in Table 4 for the mechanical joint. Similar estimates for the plasma cutting operation are shown under Fig. 8, for the electron beam welding scheme on Fig. 9, and for the alternative laser cutting and welding scheme on Fig. 11. Although these times are not accurate, they do provide a basis for comparison between the schemes because the advantage which they indicate in favour of the mechanical joint is due to the additional operations necessary in the cutting and welding schemes. The estimate of 4.0 hours for parting the mechanical joint is within the 5 hours target. However, the rejoining time exceeds the target by 1.5 hours because of the 2 hours notional allowance for leak testing. No such allowance is included in the welding schemes (Fig. 9 and 11) because the requirement for leak testing is less well established, and the method for carrying it out is uncertain. This does not, however, influence the overall conclusion.

The times for parting and rejoining a single pipe using these schemes are summarised in Table 5, which compares their other relative advantages and disadvantages. The mechanical joint does require more space outside the pipe than some welding schemes but to offset this we judge that fault probabilities would be lower, the recovery from faults, inspection and testing easier with a mechanical joint. It is also more obviously suitable for repeated joining and it does not involve the introduction of contaminants.

Compared to the mechanical joint the cutting and welding schemes have a number of disadvantages. They are inherently more time consuming, they are messy producing dross and swarf, and have a higher potential for the breakdown of mechanical equipment, and for remedial work following the inspection procedures.

All the schemes require some development work: owing to pipe wall thickness, the application of lasers may be fundamentally limited, e.g. by beam defocussing in the weld. In addition, suitable techniques for leak testing all the joints require development.

5. CONCLUSIONS

Mechanical joints and cutting and welding methods using currently available technology have been considered for the parting and rejoining operation on the main coolant pipes to a fusion reactor blanket sector. It is concluded that feasible schemes incorporating either mechanical joints or cutting and welding could be developed but the mechanical joint appears to have advantages of speed and simplicity in operation and is preferred.

6. ACKNOWLEDGEMENT

The authors would like to thank Mr. J.T.D. Mitchell of Culham Laboratory for useful discussions and helpful suggestions on the presentation of the work.

REFERENCES

1. J.T.D. Mitchell and A. Hollis. A Tokamak reactor with servicing capability. Paper presented to the 9th SOFT Conference - Garmisch-Partenkirken, Germany, June 1976.

2. J.T.D. Mitchell. The impact of servicing requirements on Tokamak fusion reactor design. Paper presented to Fusion Reactor Seminar School Erice, September 1976.

3. G.A. Carlson and R.W. Moir. Mirror fusion reactor study. American Nuclear Society Winter Meeting, San Francisco, California, November 1975. UCRL Preprint 76985.

4. Private communication between M.E. Beasley of the Gray Tool Company and D.A. Briaris, ANS.

5. C.H. Wodtke, W.A. Plunkett, D.R. Frizzell. Development of underwater plasma-arc cutting. Welding Journal, Vol. 55, pp. 15-24, January 1976.

6. R.M. Beckers, R. Blumberg, C.H. Wodtke. Remotely operated plasma torch: a tool for nuclear reactor dismantling. Oak Ridge National Laboratory, 1973.

7. Electron beam welding equipment: process parameters, limitation and control. Electron Beam Metallurgical Processing Seminar, 8-11 February 1971, Oaklands, California. Sponsored by Universal Technology Corporation.

8. J.H. Walter. Ultrasonic examination of LWR plants using an automated inspection system. Nuclear Engineering International, November 1974.

9. J.H. Walter. Automated ultrasonic examination of light water reactor systems. Conference on Periodic Inspection of Pressurised Components, London, Paper C83/74, 1974.

10. G.J. Posakony. Ultrasonic techniques for remote inspection of nuclear reactor vessels. Conference on Periodic Inspection of Pressure Vessels, London, Paper C46/72, 1972.

11. E.V. Locke, E.D. Hoag, R.A. Hella. Deep penetration welding with high-powered CO_2 lasers. IEEE Journal of Quantum Electronics, Vol. QE-8, No. 2, pp. 132-135, February 1972.

12. R.A. Hella, D.S. Gnanamuthu. High-power lasers in materials processing. AVCO Everett Research Laboratory Inc. Research Report 412, October 1975.

TABLE 1

GRAYLOC COUPLING DESIGN DATA RELEVANT TO COOLANT PIPE JOINT REQUIREMENT

Parameter	Coolant pipe requirement	Grayloc couplings		
Diameter, m	1.5	0.6	1.2	1.6
Operating pressure, MPa	6.0	6.0	0.1	0.12
Operating temp. ^{o}C	350	580	580	580
Total helium leak rate from sector, g/d	$\not>$ 40	-	10^{-3}*	10^{-3}*
Seal design life, y	2	-	30	30
Required bending strength, Nm	-	-	3400	21250
Maximum allowable radial offset prior to clamping, mm	∿10	-	10	-
Maximum allowable flange gap prior to clamping, mm	∿10	-	10	-
Radial movement for clamp disengagement, mm	less than 100	-	25	-
Axial seating load, kN	-	-	350	-

* Typical leakage rate for test conducted using helium at 0.7 MPa.

WELDING PROCESS	MANUAL ARC M.I.G.	SUBMERGED ARC	T.I.G.	PLASMA ARC	EXPLOSIVE	FLASH RESISTANCE	FRICTION	ELECTRON BEAM	LASER
PENETRATION	3MM SINGLE PASS	AT LEAST 50MM	3MM SINGLE PASS	DEEP NARROW WELD UP TO 40MM	LAP WELD PRODUCED	AT LEAST 50MM	AT LEAST 50MM	EXCESS OF 50MM	VAPOUR INTER-ACTION OVER 50MM
ABILITY TO WELD S.S.	YES	YES	YES	YES	YES	YES	YES	YES	YES
EDGE PREPARATION	V-GROOVE	V-GROOVE	V-GROOVE	NO	SOCKET/SPIGOT ARRANGEMENT	MINIMAL	YES	NO	NO
NO. OF PASSES	MULTI	SINGLE WITH MULTI-HEAD	MULTI	SINGLE	SINGLE CHARGE	SINGLE OPERATION	ONE	SINGLE	SINGLE
DISTORTION	SHRINKAGE & BENDING	SHRINKAGE & BENDING	SHRINKAGE & BENDING	SHRINKAGE	PIPE VIBRATION	ALIGNMENT PROBLEM		VERY LITTLE	VERY LITTLE
AUTOMATIC	WITH DIFFICULTY	YES	EASILY ADAPTED	YES	NO, SET-UP MAY BE COMPLEX	YES	YES, SET-UP MAY BE COMPLEX	YES	YES
PORTABLE	YES	BULKY	YES	YES	YES	NO	YES, MAY BE BULKY	YES - MAY BE BULKY	YES - HEAD NO - SUPPLY
ATMOSPHERIC PROTECTION	FUSED FLUX OR GAS	FUSED FLUX	GAS	GAS	OXIDE EXPELLED	OXIDE EXPELLED	OXIDE EXPELLED	HIGH OR PARTIAL VACUUM	GAS
HEAT SOURCE	ELECTRIC ARC UP TO 500 A	ELECTRIC ARC UP TO 1500 A	ELECTRIC ARC UP TO 200 A	ELECTRIC ARC ABOVE 150 A	EXPLOSIVE	RESISTANCE	FRICTION	ELECTRON IMPINGEMENT	LIGHT ENERGY
RELATIVE COST	CHEAP	CHEAP	CHEAP	MORE EXPENSIVE THAN T.I.G.	CHEAP	MORE EXPENSIVE	UNKNOWN	EXPENSIVE	EXPENSIVE
WELDING POSITION	ANY	HORIZONTAL/ FLAT	ANY	ANY	ANY	FIXED	ANY	ANY	ANY
POSSIBLE DEFECTS	SLAG INCLUSIONS, POROSITY	CRACKING, REDUCED TOUGHNESS	LITTLE	LITTLE	DEFECTIVE WELD DIFFICULT TO REPAIR	LACK OF FUSION, CRATERS	DEFECTIVE WELD DIFFICULT TO REPAIR	BEAM MISSING JOINT	BEAM MISSING JOINT
COMMENTS	ESSENTIALLY MANUAL METHOD. LABOUR INTENS-IVE DESLAGGING NECESSARY	LONG SET-UP TIME, LARGE WELD POOL UNCONTROLLABLE IN VERTICAL POSITION	HEAT ONLY SUPPLIED, EXTRA METAL SUPPLIED SEPARATELY	EXTENSION OF T.I.G. PROCESS, FILLER MAY BE NECESSARY	USED EXPERI-MENTALLY ON LARGE DIA. PIPES. REPAIR MAY BE DIFFICULT	PIPE SECTIONS ONLY	EXPERIMENTAL STAGES, SMALL PIPES WELDED	BEAM EASILY DEFLECTED BY MAGNETIC FIELD	ADVANCEMENT HINDERED BY E.B. DEVELOP-MENT
APPLICABLE TO CCTR MK II	NO	NO	NO	YES	POSSIBLY	NO	POSSIBLY	YES	YES

TABLE 2

SUMMARY OF REMOTELY OPERABLE WELDING METHODS APPLICABLE TO STAINLESS STEEL PIPE

TABLE 3

LASER BEAM CUTTING AND WELDING OF DIFFERENT MATERIALS

Application	Material	Thickness mm	Laser system
Cutting*	Steel alloys	44.5	12 kW AVCO Everett
Welding	S.steel	12.7	16 kW AVCO Everett
Welding	S.steel	19.0	16 kW AVCO Everett
Welding	304 s.steel	20.3	20 kW Ref.11
Welding	304 s.steel	8.2	8 kW Ref.11
Cutting*	304 s.steel	12.7	12 kW Ref.12
Cutting	304 s.steel	25.4	12 kW Ref.12
Cutting	Titanium alloys	50.8	13 kW Ref.12
Cutting	Rene 95	56.0	18 kW Ref.12
Welding	18/8 s.steel	6.0	4 kW BOC
Cutting*	18/8 s.steel	22.0	4 kW BOC

* With inert gas jet assistance.

TABLE 4

ESTIMATED DURATION OF SEPARATING AND REJOINING OPERATIONS USING A MECHANICAL COUPLING

SEPARATING OPERATION	
Operation	Est.duration (upper limit) h
Approach operating trolley and lock in position	1.0
Remove external insulation from pipe	
Locate manipulator for clamp disconnection, release clamp	0.5
Part the two halves of the joint	0.5
Remove trolley	1.0
Total	4.0

REJOINING OPERATION	
Operation	Time h
Approach operating trolley and lock in position	1.0
Accurately align pipe hubs using bellows	2.0
Locate manipulator, tighten clamp	0.5
Leak test (notional allowance)	2.0
Replace insulations, withdraw trolley	1.0
Total	6.5

TABLE 5

COMPARISON OF FEATURES APPLICABLE TO SCHEMES FOR SEPARATING AND REJOINING COOLANT PIPES

Feature		Mechanical joint	Plasma-arc cut/ electron beam weld	Laser cut/ laser weld
Duration of servicing operation	Parting	4.0 h	5.0 h	7.5 h
	Joining	6.5 h	10.5 h	8.5 h
Operation performed inside or outside pipe		Outside	Outside or inside	Inside
Space required around pipe		Yes - less than 0.25 m on radius	Yes - up to 0.5m on radius outside 0.1m for weld on inside	0.1 m
Fault probability		Low	Higher than mechanical joint	Higher than mechanical joint
Recovery from fault		Yes	Yes - time consuming	Yes - time consuming
Inspection and testing		Leak testing only	Ultrasonic and leak testing*	Ultrasonic and leak testing*
Suitable for repeated pipe joining		Yes	Yes - more complex than mech. joint	Yes - more complex than mech. joint
Introduction of material contaminates		No	Yes	Yes
Development required		Testing under representative conditions inc. thermal cycling	Initial penetration in cutting operation	High power lasers. Deep penetration welding

* The leak testing has not been included in the estimated duration of servicing operation.

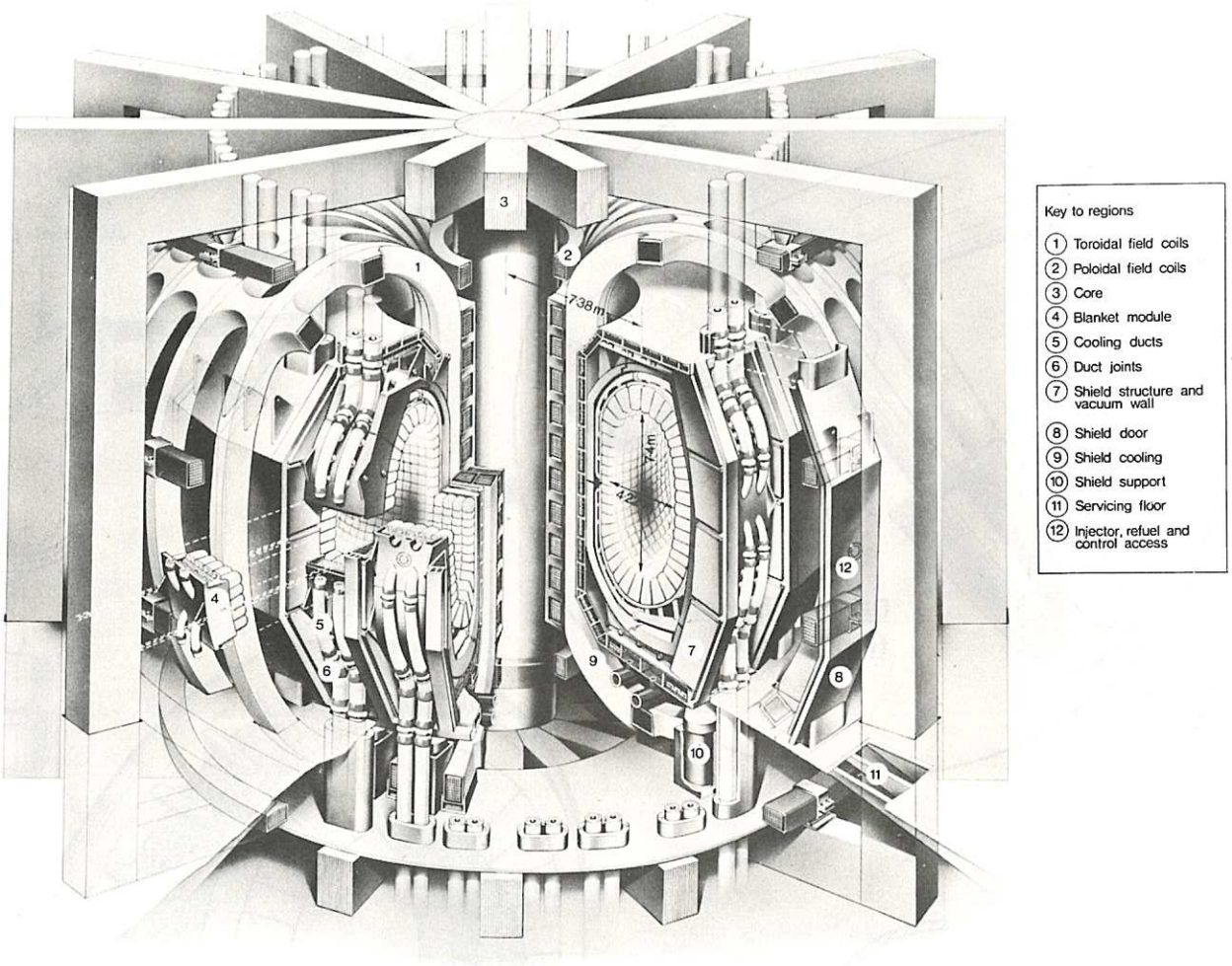

Figure 1 Culham Conceptual Tokamak Reactor Mk.II

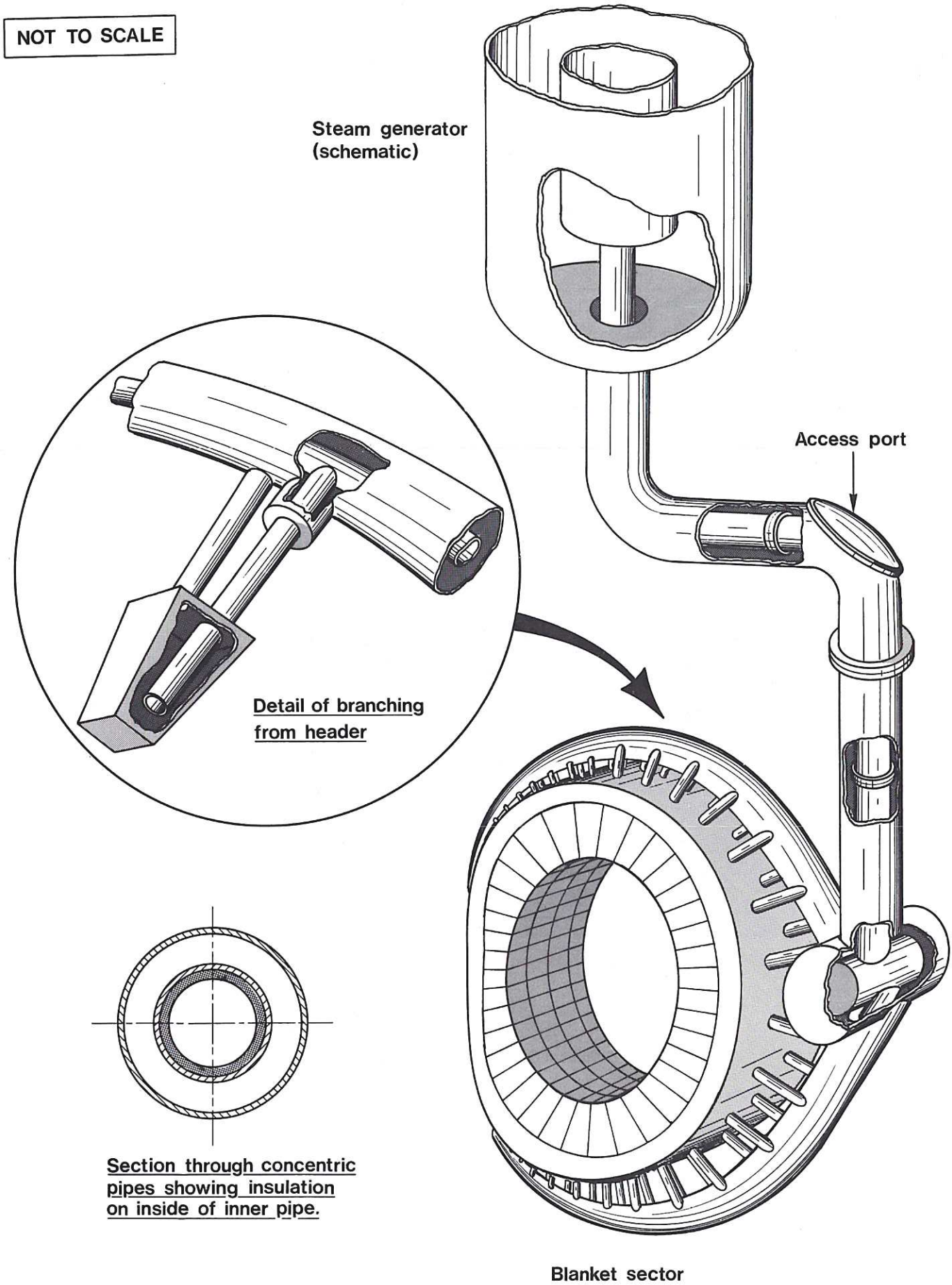

Figure 2 Diagrammatic Arrangement of Concentric Pipe System

CLM-R174

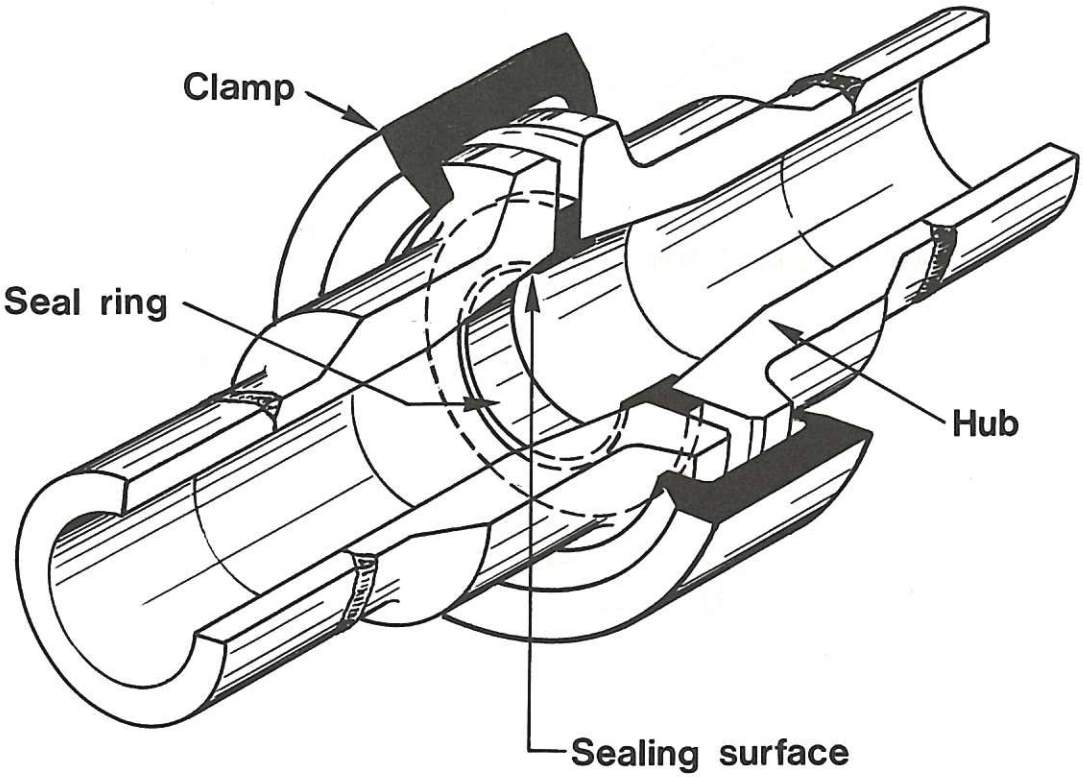

Figure 3 "GRAYLOC" Mechanical Pipe Coupling, showing Seal Ring in position.

CLM-R174

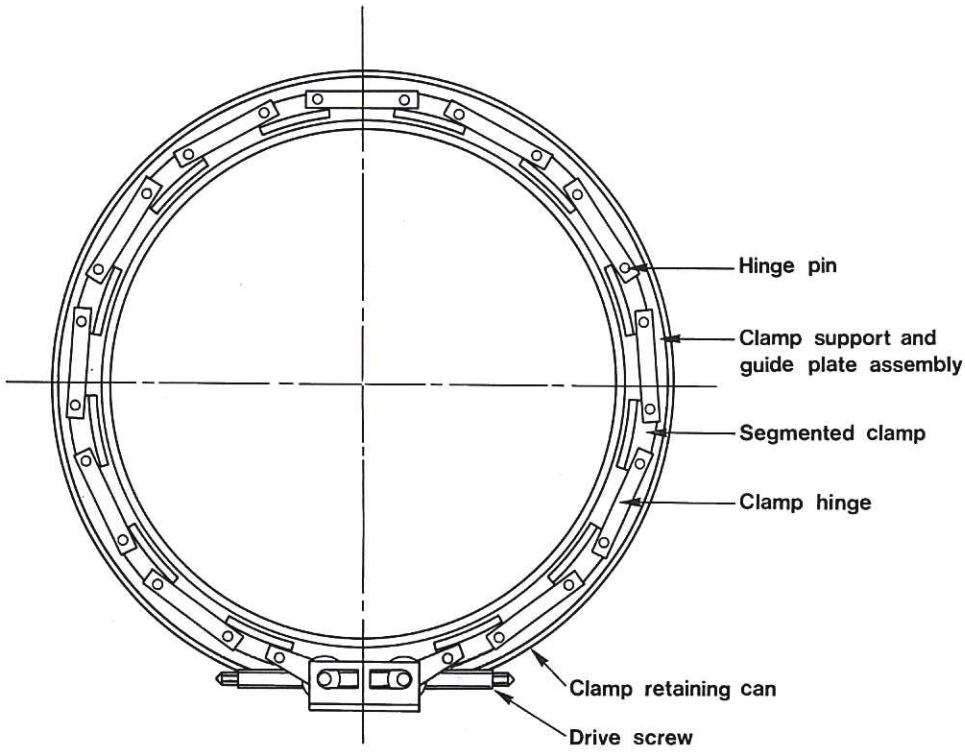

Figure 4 Segmented Clamp Arrangement for use on large diameter pipes.

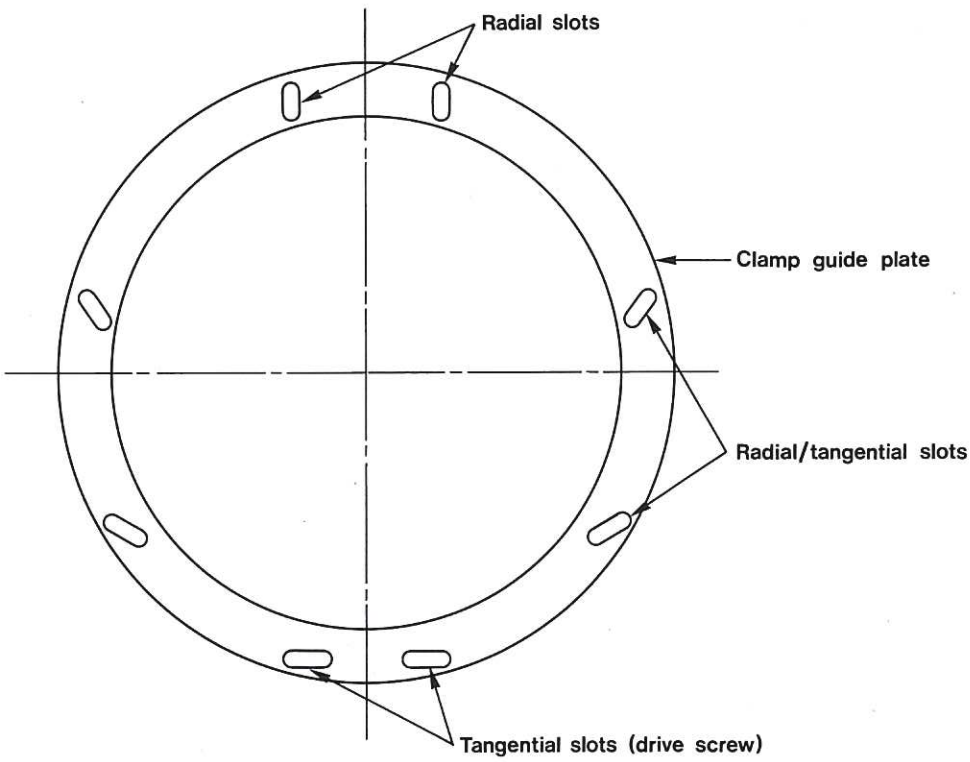

Figure 5 Guide Slots for control of clamping forces.

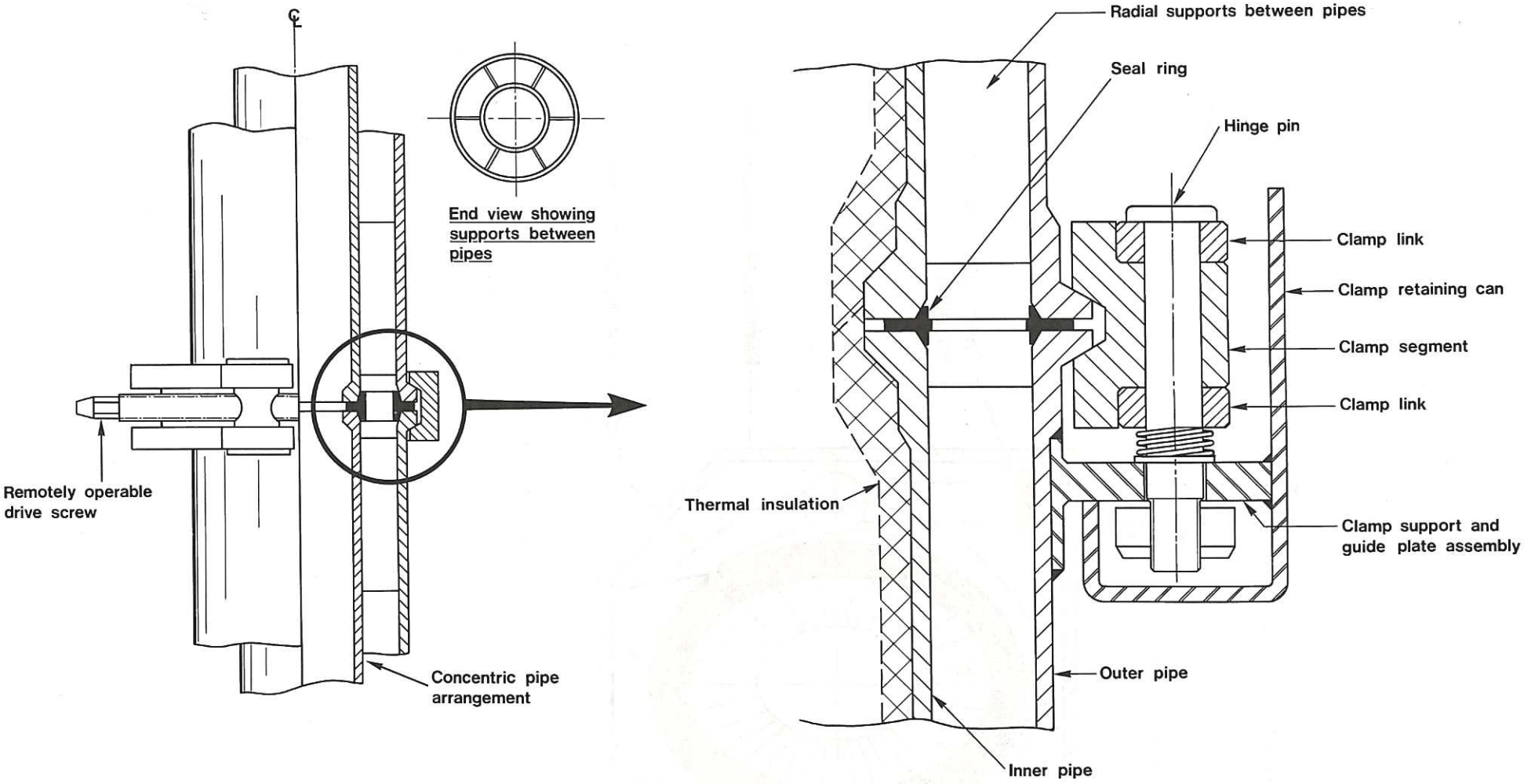

Figure 6 Possible scheme for joining Concentric Pipe Arrangement, using a Mechanical Coupling.

CLM-R174

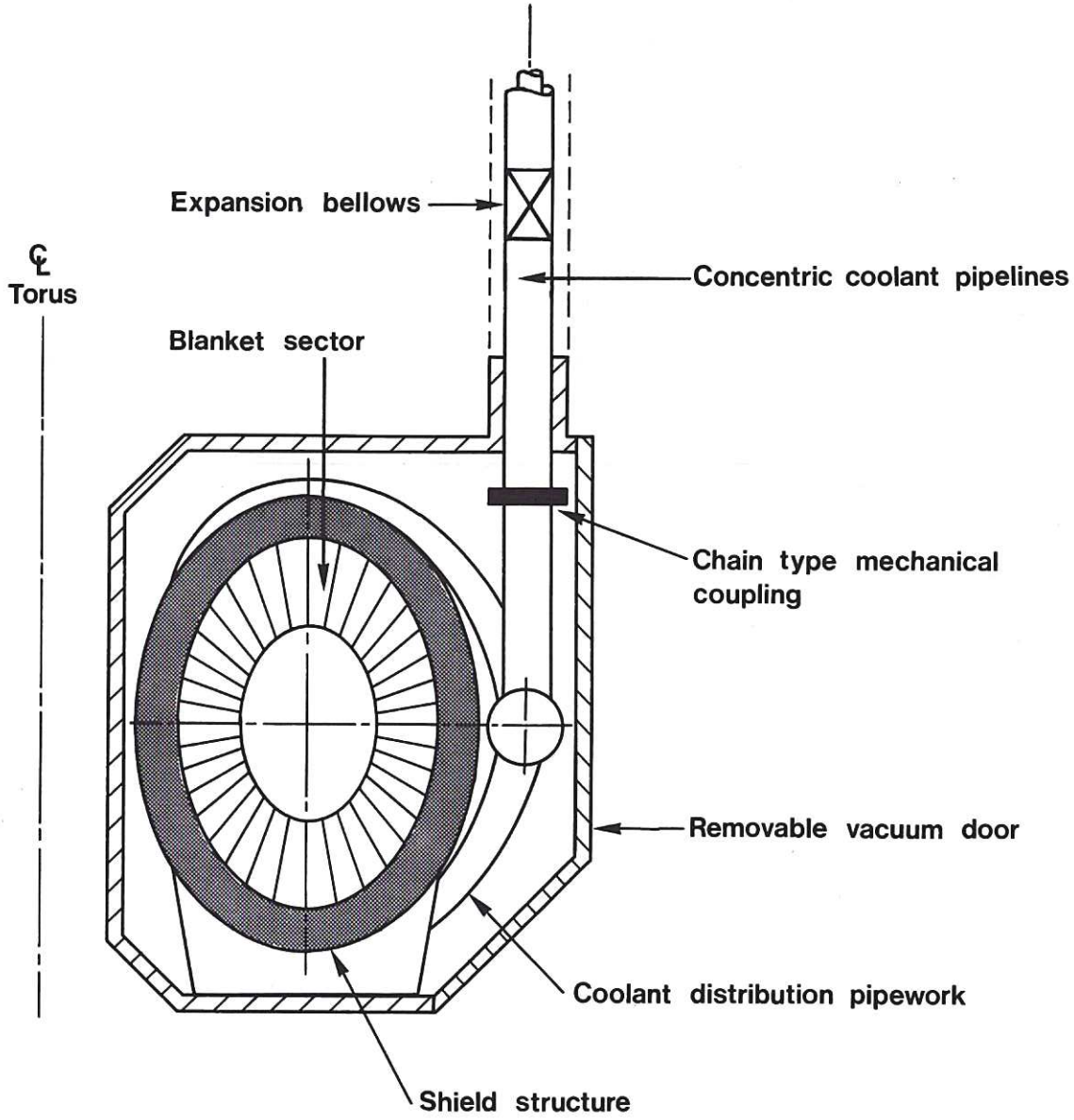

Figure 7 Schematic Section through Torus, showing Mechanical Coupling inside the Vacuum Boundary.

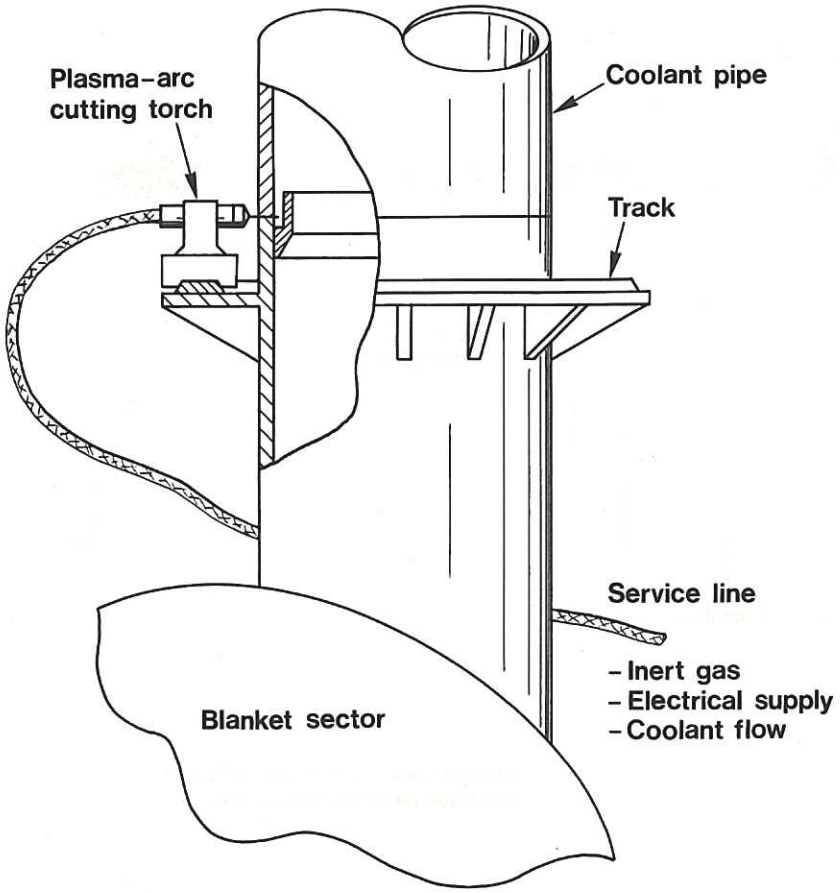

ESTIMATED DURATION OF PLASMA-ARC CUTTING OPERATION

OPERATION	ESTIMATED DURATION (H)
APPROACH CUTTING TROLLEY, LOCATE AND LOCK IN POSITION	1.0
REMOVE EXTERNAL INSULATION FROM PIPE	1.0
LOCATE CUTTING HEAD BRACKET, PREPARE AND PERFORM DUMMY RUN	1.0
PERFORM CUTTING OPERATION AND INSPECT	0.5
CLEANING OPERATION TO REMOVE SPLATTER	0.5
REMOVE CUTTING TORCH AND WITHDRAW TROLLEY	1.0
TOTAL	5.0*

* IN A TWO PIPE SYSTEM THIS TIME WOULD BE APPROXIMATELY DOUBLE, AND IN A CONCENTRIC PIPE SYSTEM REMOVAL OF THE INNER PIPE THROUGH THE ACCESS PORT COULD BE CARRIED OUT IN PARALLEL.

Fig.8 Schematic Arrangement for Remote Plasma-Arc Cutting of Coolant Pipe.

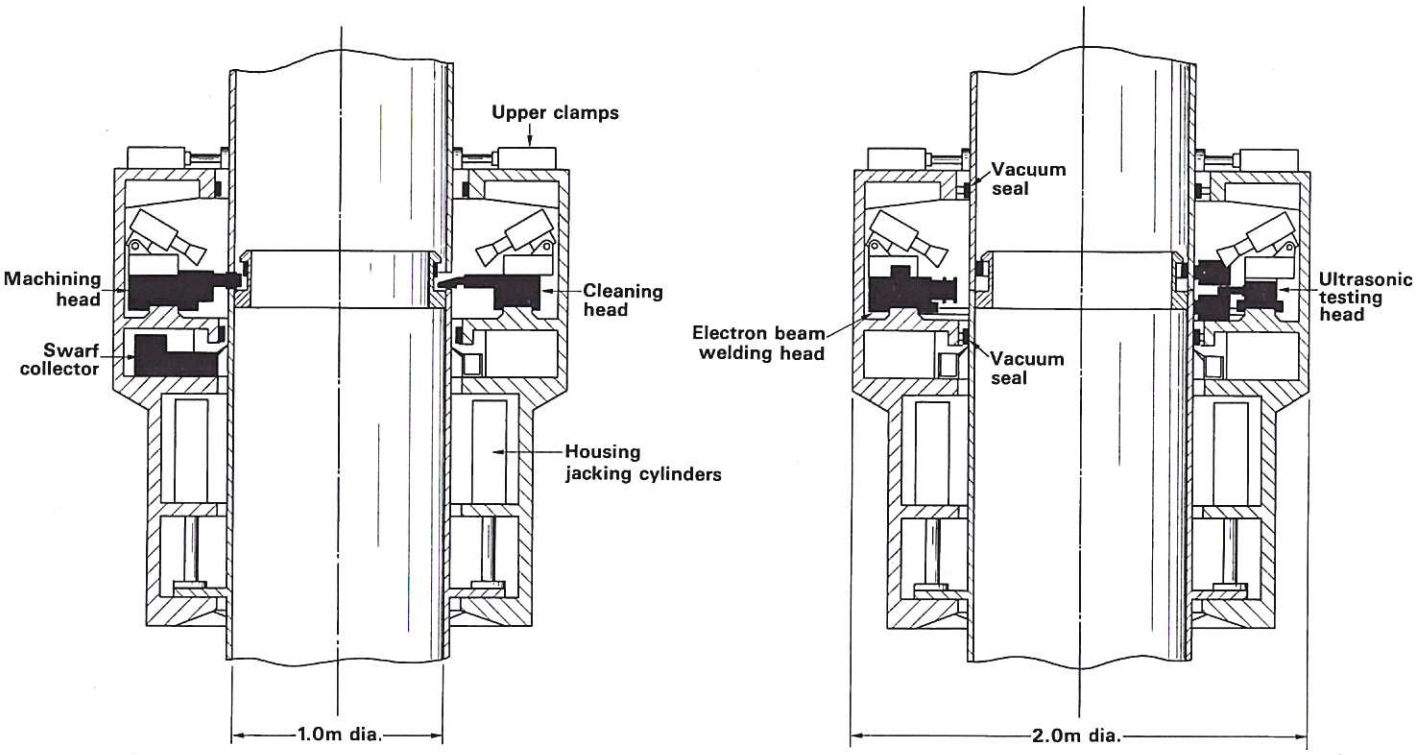

ESTIMATED DURATION OF ELECTRON BEAM WELDING OPERATION PERFORMED FROM OUTSIDE THE PIPE

OPERATION	ESTIMATED DURATION (H)
APPROACH MACHINE TROLLEY AND LOCK	1.0
ESTABLISH SECTOR WITH SERVICING MACHINE AND ALIGN FOR MACHINING OPERATION	1.0
JACK SERVICING MACHINE AND ACTIVATE CLAMP SYSTEMS	0.5
CHECK SERVICING MACHINE AND FACILITIES	0.5
MACHINE PIPE END FACE, REMOVE SWARF, INSPECT	1.5
MATE PIPES FOR WELDING, RECLAMP AND ACTIVATE VACUUM SEALS	1.5
EVACUATE WELD HOUSING, PERFORM JOINT SCAN, TACK WELD, FULL-PENETRATION BUTT WELD	1.5
WELD EXAMINATION (REPAIR AND LEAK TESTING TIME EXCLUDED)	0.5
DISCONNECT SERVICES, REMOVE SERVICING MACHINE FROM PIPE	1.5
REPLACE THERMAL INSULATION, WITHDRAW MACHINE TROLLEY	1.0
TOTAL	10.5*

* IN A TWO PIPE SYSTEM THIS TIME WOULD BE APPROXIMATELY DOUBLE, AND IN A CONCENTRIC PIPE SYSTEM REMOVAL OF THE INNER PIPE THROUGH THE ACCESS PORT COULD BE CARRIED OUT IN PARALLEL.

Figure 9 Pipe Welding performed from outside the Coolant Pipe.

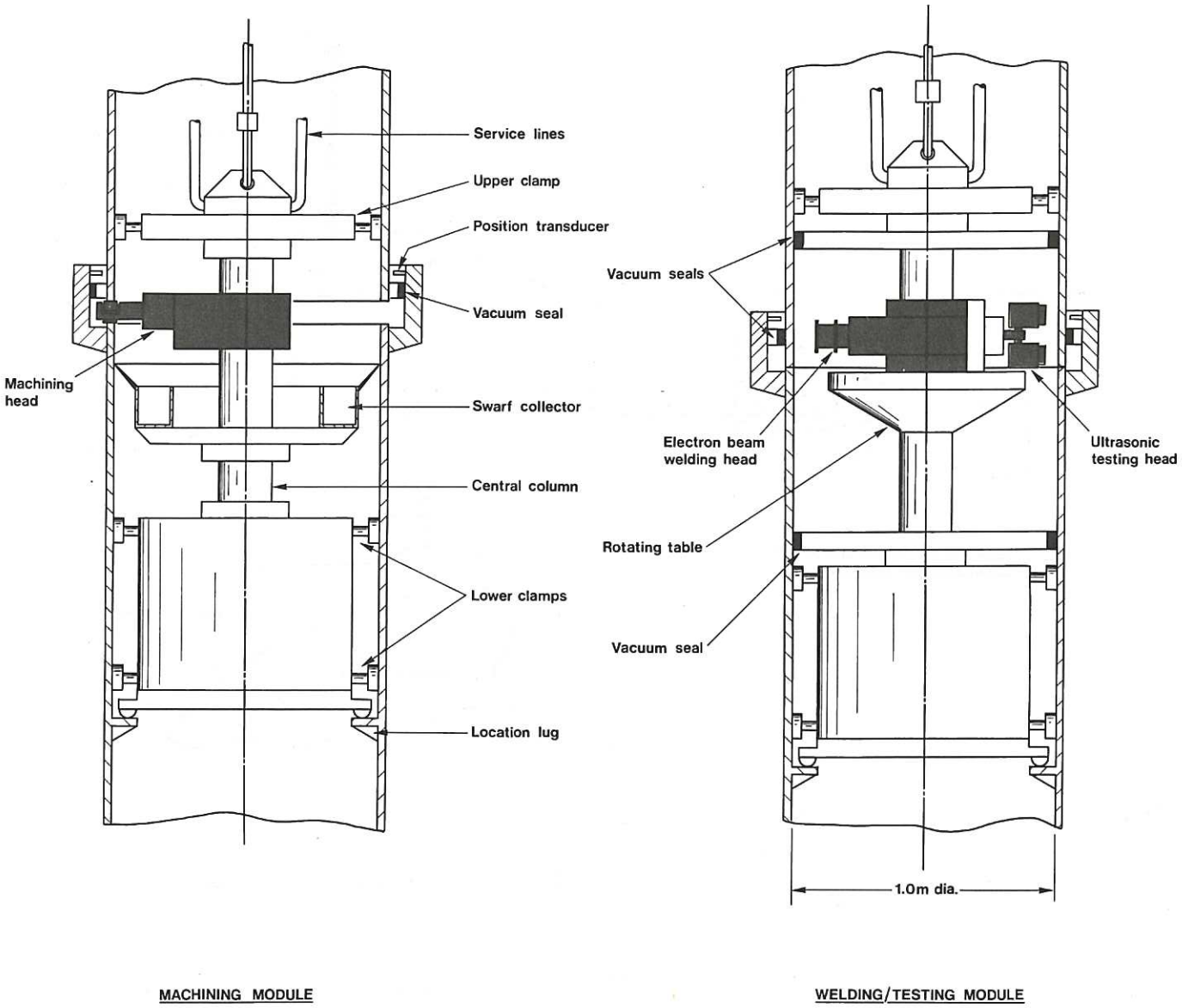

Figure 10 Pipe Welding performed from inside the Coolant Pipe.

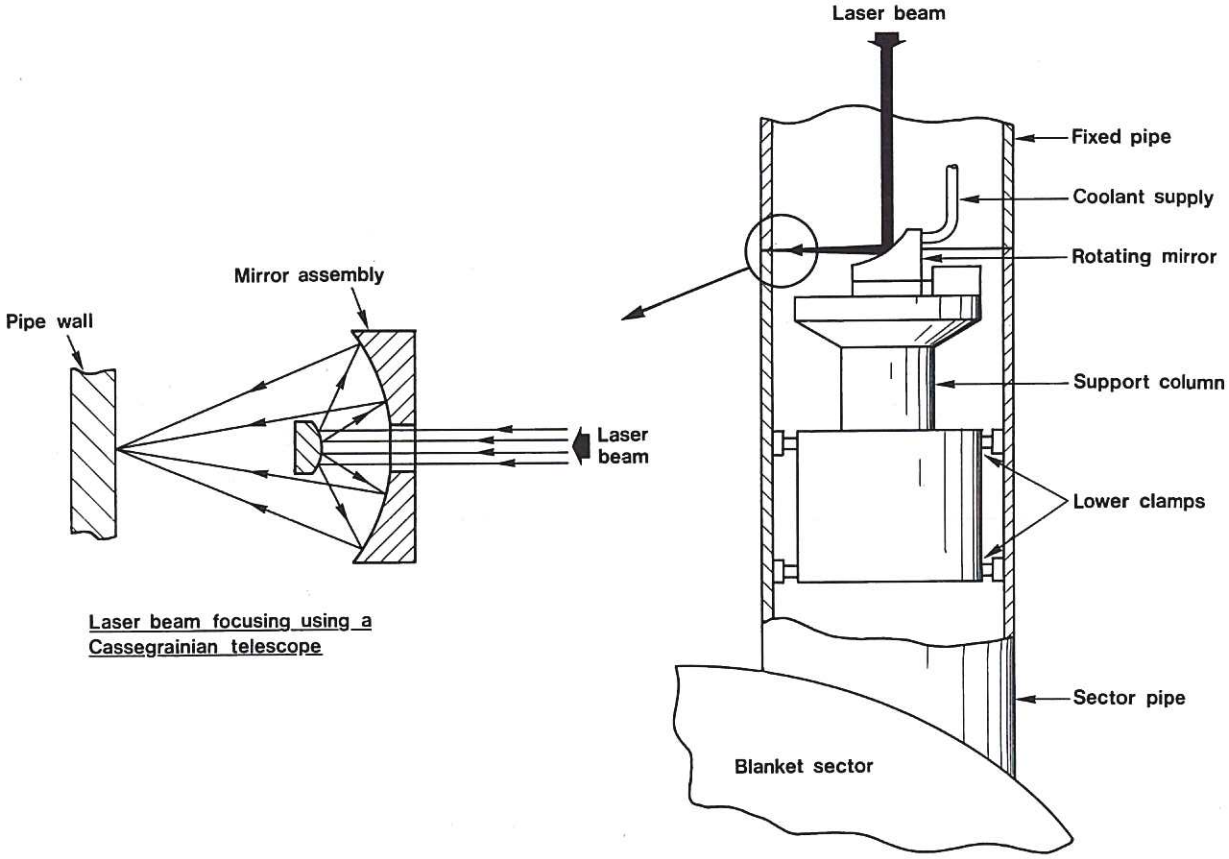

ESTIMATED DURATION OF LASER CUTTING OPERATION

OPERATION	ESTIMATED DURATION (H)
REMOVE SHIELDING PLUG FROM CONCRETE STRUCTURE	0.5
REMOVE ACCESS COVER ON CONCENTRIC PIPE, SEE FIG. 2	1.0
OBTAIN ACCESS, DISCONNECT AND REMOVE INNER PIPE	2.0
LOWER AND LOCATE LASER CUTTING MACHINE	1.0
ESTABLISH SERVICES, PERFORM DUMMY RUN	1.5
INTRODUCE LASER BEAM, PERFORM CUTTING OPERATION, INSPECT	1.0
WITHDRAW CUTTING MACHINE	0.5
TOTAL	7.5

ESTIMATED DURATION OF LASER WELDING OPERATION

OPERATION	ESTIMATED DURATION (H)
APPROACH TROLLEY AND ALIGN PIPES FOR MACHINING OPERATION	2.0
ACCURATELY LOCATE JOINTING MACHINE, CHECK MECHANICS	1.0
PERFORM MACHINING OPERATION, REMOVE SWARF, INSPECT	1.5
JACK SECTOR, ALIGN PIPES FOR WELDING	1.0
CHECK LASER OPTICS, PERFORM JOINT SCAN, TACK WELD, FULL-PENETRATION BUTT WELD	2.0
WELD EXAMINATION (REPAIR AND LEAK TESTING TIME EXCLUDED)	0.5
REMOVE JOINTING MACHINE	0.5
REASSEMBLE INNER PIPE AND ACCESS COVERS	*
TOTAL	8.5

* THIS TIME IS NOT INCLUDED IN THE TOTAL SINCE THE OPERATION CAN BE CARRIED OUT IN PARALLEL WITH THE REPLACEMENT OF THE VACUUM DOOR.

Figure 11 Possible arrangement for Laser Cutting and Welding of the Coolant Pipe.