CLM - R 184

CLM - R 184

UKAEA

Report

DESIGN OF THE SEGMENT STRUCTURE AND COOLANT DUCTS FOR A FUSION REACTOR BLANKET AND SHIELD

D A BRIARIS
J R STANBRIDGE

CULHAM LABORATORY
Abingdon Oxfordshire

1978

C/18 Available from H. M. Stationery Office £1.00

CLM-R 184

DESIGN OF THE SEGMENT STRUCTURE AND COOLANT DUCTS FOR A FUSION REACTOR BLANKET AND SHIELD

D.A. Briaris* and J.R. Stanbridge
Culham Laboratory, Abingdon, Oxon, OX14 3DB, UK
Euratom/UKAEA Fusion Association

ABSTRACT

An outline design and analysis of a support structure for the replaceable first wall of a helium cooled fusion reactor blanket has been undertaken. The proposed structure supports all the segment gravitational loads with maximum deflections limited to <10 mm, and is itself supported off the outer shield by a simple vee-in-groove arrangement. It is a feature of the design that the coaxial coolant pipes and the segment structure operate at the same temperature, making it possible for them to be integrated, thereby avoiding the necessity for pipe bellows. The requirements of cooling the inner arm of the structure and increasing the major radius of the torus by ≈ 0.5 m, have been identified as problems associated with the 'horseshoe' shaped structure applicable to the reactor with divertor. For a ring structure, i.e. reactor without divertor, these problems do not arise.

*Associated Nuclear Services, Epsom, Surrey

May 1978

SBN: 85311 069 7

CONTENTS

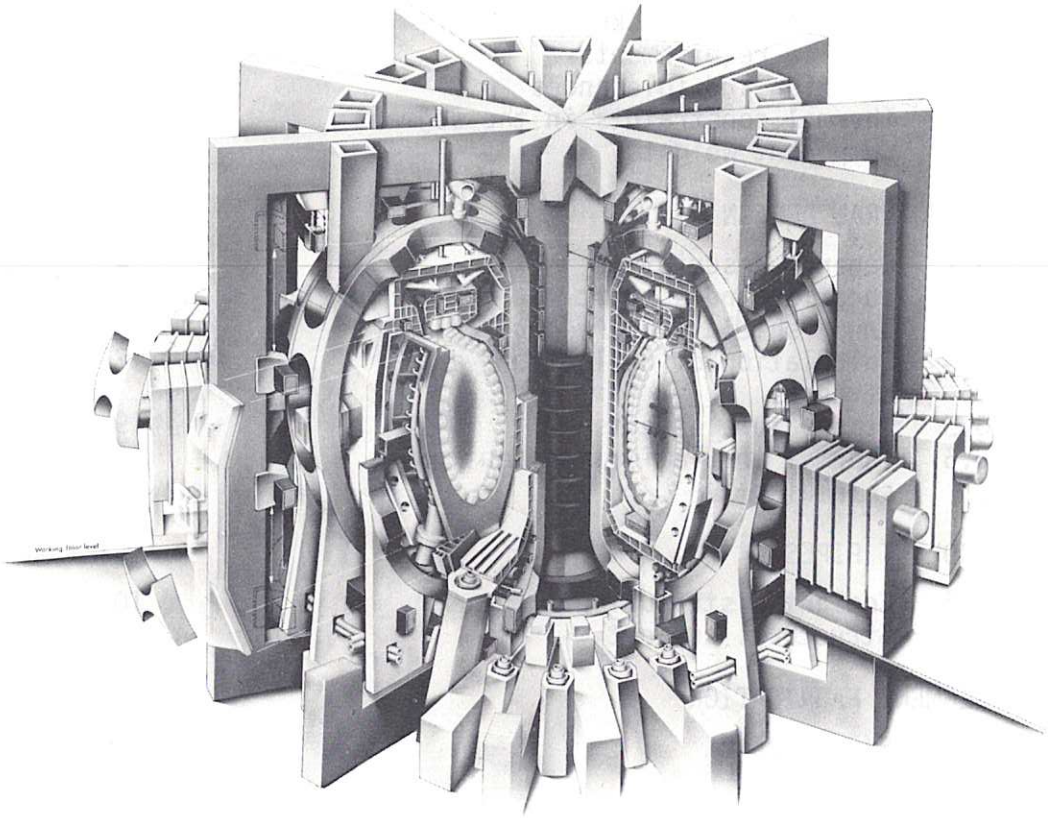

Fig.1 Artists Impression of Culham Conceptual Tokamak Reactor Mk IIB.

1. INTRODUCTION

Fusion reactors will require regular servicing primarily to replace the first wall structural materials which cannot be designed for the reactor lifetime at practical wall loadings. The service operations will also enable the tritium bearing breeder materials to be removed for processing. Current estimates indicate that the blanket will require replacement about every two years.

The Culham Conceptual Tokamak Reactor Mk II[1,2] (CCTR Mk II) embodies a concept for replacing the radiation damaged blanket quickly. The blanket is divided into 20 separate segments, each segment comprising a section of blanket, shield and integral cooling pipes. The segments are located in an outer fixed shield structure provided with doors and openings through which the segments are moved, Figures 1 and 2. The neutron flux attenuation provided by the inner shield is such that any structure placed outside will function for the service life of the reactor. This report defines the requirements and outline design of the support structure of a blanket segment.

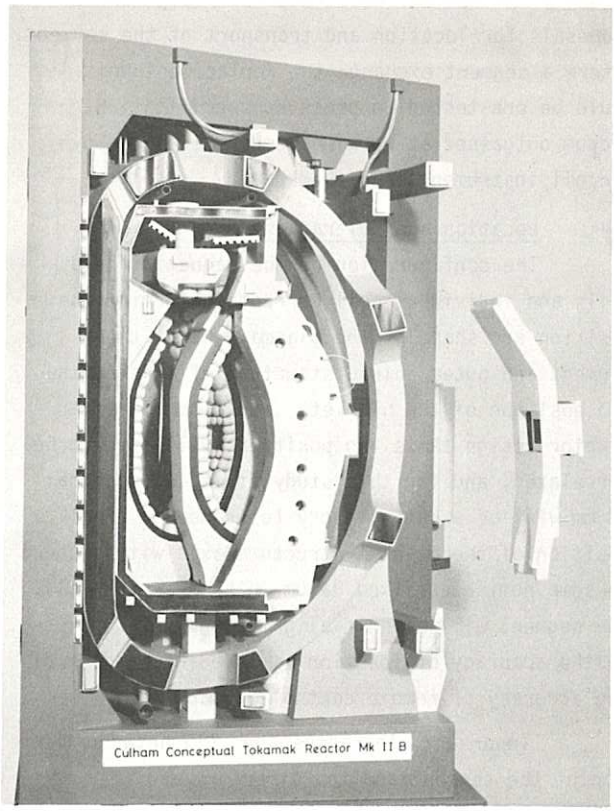

Fig.2 Sectioned model of CCTR Mk IIB showing segment partly withdrawn.

The design philosophy is that the structure should be the sole support for all the gravitational loads of the blanket cells, inner shield and coolant pipework, with maximum deflections being limited to <10 mm. A fabricated horseshoe-shaped structure is proposed, Figure 3, the whole being supported off the outer shield by a single radial vee-in-groove arrangement.

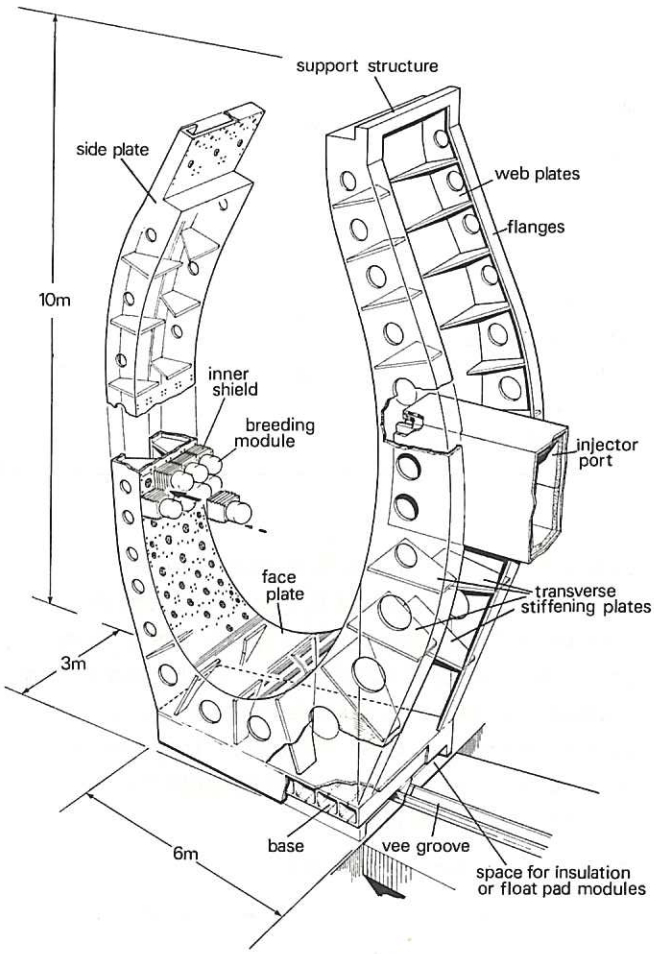

Fig.3 Segment support structure.

2. SEGMENT FUNCTIONAL DESIGN

2.1 Reactor size and principal parameters

The dimensions and operating parameters of the CCTR Mk IIA (Table 1) determine the structure size. Where significant differences to the structure would occur from the Mk IIB set of parameters these are indicated in the report. The segment design described assumes that the blanket is cooled by helium gas at 4-6 MPa pressure with a pressure drop across the segment of approximately 0.1 MPa. The coolant temperatures are ≈350°C at the inlet to the segment, and ≈750°C at outlet.

For this study, we assumed the blanket structure and materials adopted for the Demonstration Reactor design by General Atomic

Table 1

PARAMETERS OF THE CULHAM CONCEPTUAL TOKAMAK MK II REACTOR DESIGNS

		Mk IIA	Mk IIB
Net electrical power	MWe	2500	1200
Gross thermal power	MWth	5830	3400
Major radius	m	7.4	6.7
Minor radius(mid plane)	m	2.1	1.9
Aspect ratio		3.5	3.5
Ellipticity		1.75	1.75
First wall power loading	MWm^{-2}	6.7	4.5
Magnetic field on axis	MAm^{-1}	3.2	3.2
Peak magnetic field	MAm^{-1}	6.4	6.4
Plasma current	MA	11.7	10.2
Safety factor(at wall)	q	2.6	2.5
Plasma pressure ratio	βp	1.9	1.9
Plasma pressure ratio	βt	0.093	0.092
Plasma density x 10^{-20}	ions m^{-3}	3.5	3.2
Required energy confinement time	s	1.5	1.64

Company[3], comprising a 0.16 m inner zone of lithium lead (Li_7Pb_2) and 0.14 m outer zone of lithium orthosilicate (Li_4SiO_4). In the present study the blanket thicknesses are 0.20 m and 0.15 m respectively based on studies carried out by Culham Laboratory, these dimensions including a 10% increase in thickness to compensate for the cellular configuration[4].

2.2 Inner shield thickness

The inner shield is located immediately behind the blanket to protect the structure, pipework and other components from excess neutron damage. The design requirement is that structure and components outside the inner shield should have a service life greater than 30 years at a 0.75 load factor. The inner shield composition is 68% stainless steel and 29% boron carbide giving an attenuation factor of 2 for 0.064 m thickness.

A design criterion for long life components such as the outer shield and the structure[5] states that the fluence must not embrittle the components. A uniform uniaxial elongation in a conventional tensile test of greater than 10% is taken as satisfying this criterion, requiring a fluence of $\nmid 3 \times 10^{25}$ $n.m^{-2}$ for Type 316 stainless steel[5]. The required inner shield thickness is between 0.35 and 0.40 m for wall loadings between 4 and 7 MWm^{-2}, the range covered by the CCTR IIA and B.

Neglecting neutron streaming effects the neutron flux at the front of the inner shield is $1.83 \times 10^{18} nm^{-2}s$ (E>0.1 MeV). The resulting volumetric swelling after 30 years at 0.75 load factor will be about 1% at the design temperature of 350°C[4]. Therefore it would seem unlikely that swelling alone would necessitate replacement of the inner shield.

2.3 Service requirements

The service life of the blanket structure will be about 2 years; consequently, with regular intervals between shutdowns, one of the segment structures must be replaced every 4-6 weeks. The aim of the design is to complete a segment replacement in a weekend shutdown not exceeding 60 hours. The time available between breaking the main coolant pipe joint[6] and removing the segment from the reactor hall is about 10 hours. In addition to scheduled blanket cell replacement, blanket segment(s) would be removed as necessary for breakdown repairs to cells, pipework, instrumentation and other components.

It is estimated that the dose rate between the inner and outer shields is $\simeq 10^3$ rad h^{-1} and it is proposed that the blanket and segment structure temperature should not be permitted to fall below ≃250 - 200°C during a segment exchange. Consequently remote controlled machines will be required for all servicing operations and this factor has strongly influenced the structural design and proposals for location and transport of the segment. Before a segment exchange the replacement unit would be pre-tested to pressure specification, vacuum outgassed at working temperature or above and all instrumentation checked.

2.4 Location and tolerances

The configuration of the magnetic field coils and individual coil currents determine the position and shape of the plasma, whilst the segment and outer shield structure will determine the position of the blanket. In a complete reactor design these two positions will have to be correlated, and for this study it is assumed that 10 mm will be a satisfactory tolerance on the position of the blanket structure axis with respect to some nominated fixed datum in the reactor hall. The segment will be self-aligning on its supports so the accuracy of location is made independent of the accuracy of remote controlled machines.

Important clearances are: (1) between the top of the segment and the divertor, and (2) between individual segments. The thermal movements of the segment between ambient and the normal

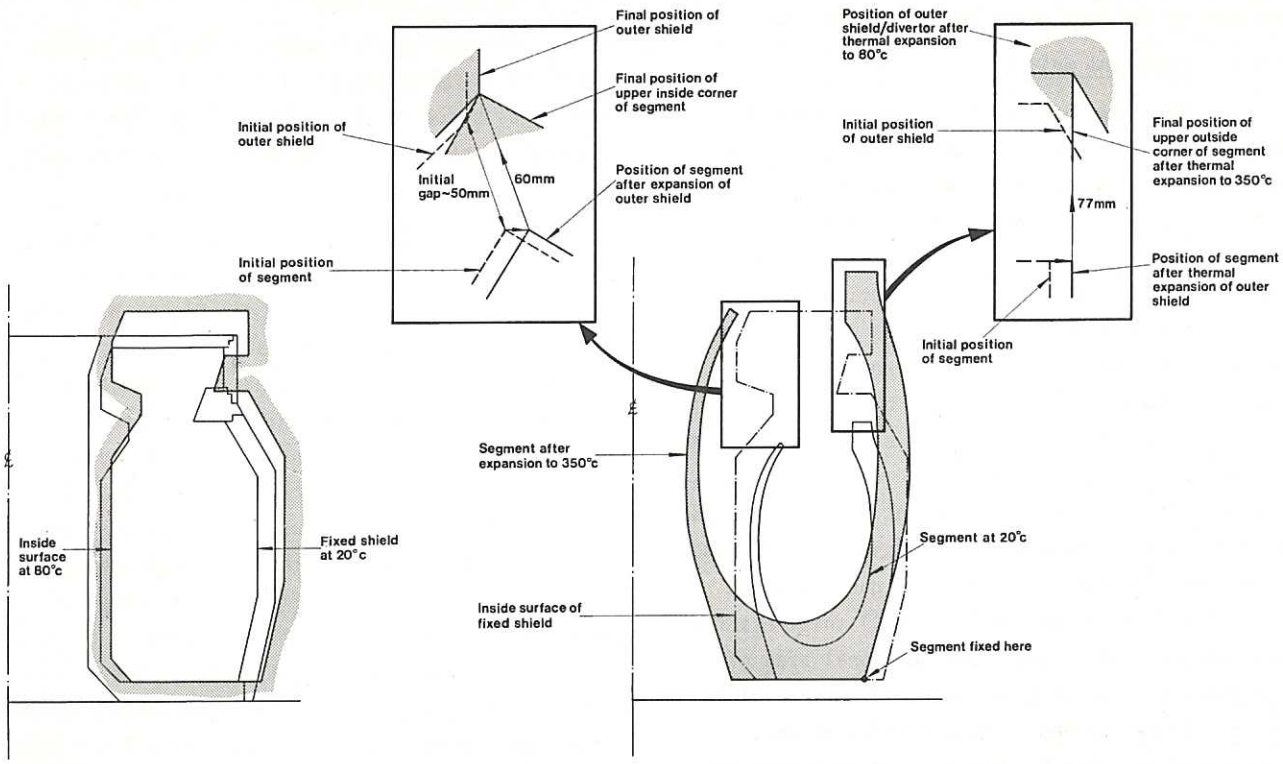

Fig.4 Thermal expansion movements of outer shield and segment structure.

operating condition shown in Figure 4 indicate that a clearance of more than 50 mm at the top is necessary. This clearance would be reduced if the segment is preheated prior to assembly as anticipated. The operating gap between adjacent segments should not exceed 20 mm in order to minimise neutron streaming and local damage to the blanket support structure.

2.5 Thermal constraints in the segment

During reactor operation the only significant means of heat loss from the segment structure are to the coolant gas and by radiation to the water-cooled outer shield at 80°C. Heat generated in the structure which was estimated to be 56 kW m^{-3} for the CCTR Mk IIA[3], may result in high temperatures or temperature gradients but these must be controlled and heat loss to the surroundings limited by thermal insulation on the outer shield surfaces.

The principal afterheat following reactor shutdown, amounting to 0.005 of the full load, arises from the γ-decay of neutron activated atoms in the blanket structure itself for there are no significant γ-active transmutation products from the breeder materials Li, Si or O with high γ-energies (>0.5 MeV) or a half life in the range 3 hours to 3 years. 20% of the total γ-energy is deposited in the structure and the remainder in the breeding material. The total afterheat release 1.7 hours after reactor shut-down is 5.1 MWm^{-3} [3] and it remains constant to within a few percent for 10-20 hours. We assume that the afterheat release in the shield is one tenth of that in the blanket structure, and calculate the adiabatic temperature rise to be 20°C min^{-1} in the blanket structure and 5°C min^{-1} in the shield. We conclude that it will be necessary to cool the segment structure during and after removal from the reactor using a low pressure cooling system incorporated in the transporter.

Thermal excursions in the segment will also occur following transients such as controlled power reductions, forced outages and at the end of a burn. In each of these transients an important factor in controlling the gas outlet temperature is the stored energy in the blanket, and the requirement to control the power to gas flow ratio. About 85% of the blanket stored energy resides in the lithium orthosilicate because of its higher specific heat and operating temperature relative to the lithium lead. The effect of temperature excursions are a major

consideration which although not dealt with in depth in this study, must be analysed and guarded against in any more detailed design exercise.

2.6 Component weights

The distribution of weight was determined by radially dividing the segment into 25 approximately straight sections, the size of individual sections being determined by the segment curvature. The toroidal dimensions correspond to those for the CCTR Mk IIA, in Table 1. Each section comprises a number of layers which are, working from the plasma outwards, the breeding blanket, the inner shield and the support structure. The blanket and shield were assumed continuous although account was taken of the cellular configuration and coolant channels. The weights of the coaxial coolant pipes are based on maximum dimensions of 1.5 m inside diameter and 50 mm wall thickness for the cold gas pipe, and 1.0 m inside diameter and 10 mm wall thickness for the hot gas pipe. The cross sectional area of the pipes was varied proportionally to the volume of the blanket served. Weight calculations, summarised in Table 2, were used to determine the deflection and resultant stresses in the support structure (see Section 3.4), and for locating the position of the centre of gravity.

3. STRUCTURAL DESIGN

3.1 General description

The design philosophy is that the structure should be the sole support for all the gravitational loads due to the blanket cells, inner shield and coolant pipes, with deflections being limited to <10 mm.

The structure is a fabricated horseshoe-shaped construction supported on a base which has a truncated triangular shape, see Figure 3. The inner and outer limbs of the structure consist of a 50 mm thick face plate extending the width of the segment and two 40 mm thick wing plates placed roughly radially behind it at its edges and acting as web plates. Two further 50 mm thick plates act as the rear flanges of what are, in effect, two structural channels connected by the face plate. The structure is stiffened by 30 mm thick transverse diaphragm plates profiled to clear the coolant pipes. The weight of the segment is transmitted through a diaphragm strengthened box section to a 0.3 m deep fabricated base, the whole being supported off the outer shield by a single radial vee-in-groove arrangement, Figure 5, which is a positive geometric feature to ensure very accurate location.

Table 2
SUMMARY OF STATIC LOADS
ON THE SEGMENT STRUCTURE

Item		Composition	Mean density kgm^{-3}	Volume (1) m^3	Weight tonnes	% of total weight	'x' (2) m
Blanket 1		50% Li_7Pb_2 30% Carbon 4% Inconel 16% Void	4360	15.4	42.4	15.6	0.41
Blanket 2		25% Li_4SiO_4 60% Carbon 4% Inconel 11% Void	1570				
Inner shield		68% 316 s.steel 29% B_4C 3% Void	5940	19.01	112.95	41.54	0.51
Structure, including base	Face plate	95% 316 s.steel 5% Void	7360	4.91	36.10	13.27	0.63
	Support frames	316 s.steel	7750	6.97	52.36	19.26	0.68
Pipework		316 s.steel	7750	3.63	28.11	10.34	0.44
Complete segment		-	-	-	271.90	100.00	0.54

Notes: 1. Volume includes a 10% allowance for voidage between cells.
2. 'X' is the horizontal distance between the centre-of-gravity of the segment and the nominal plasma major radius.

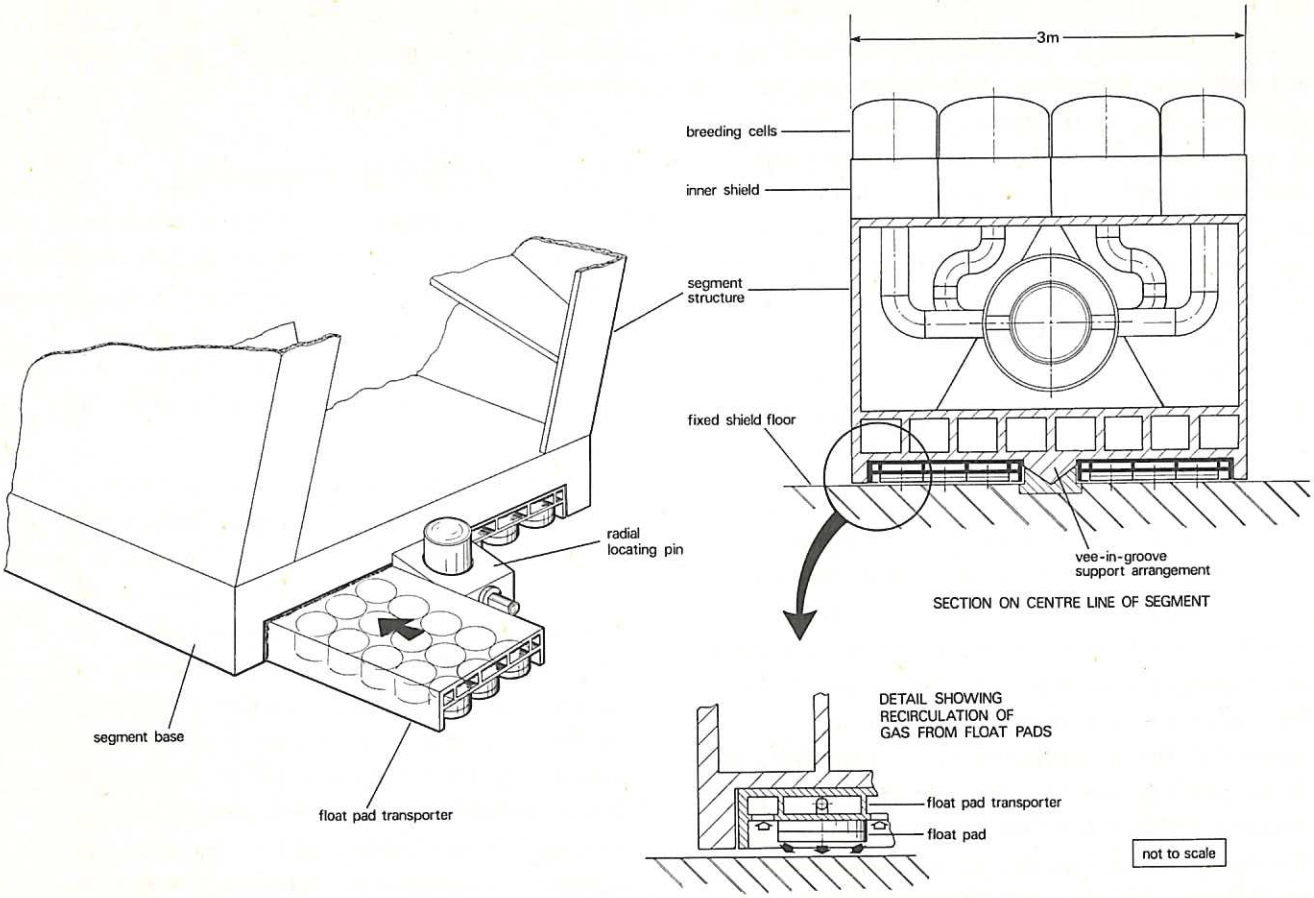

Fig.5 Scrap views of segment base showing support vee-groove and float-pad transporters.

During the replacement operation the segment is moved with the aid of gas operated float-pads which reduce the draw bar pull to as little as 0.1% of the segment weight.

A possible alternative design[10] utilises the neutron shield as an integrated structure from which the blanket is supported. Combining functions in this way leads to high neutron damage and heat generation in the structure itself and so in the present study the structure was placed behind the shield, as described above, when it was found that sufficient rigidity could be obtained in this way.

3.2 Location and support

The segment is located on the fixed outer shield by supporting it on a vee-groove, Figure 5. The included angle of the vee-groove is 120°, the bearing faces 0.2 m wide, and provided that the coefficient of friction between the vee and groove is <0.5, the segment will be statically stable.

Replaceable low friction graphited nickel bearing pads are proposed as inserts onto the surfaces of the vee. This material is suitable for operation in the high radiation environment and temperatures up to $600^{o}C$. The coefficient of friction is ≈0.2 when the pads mate with the fine ground stainless steel surfaces of the groove, but it will be necessary to carry out friction coefficient measurements up to the lifetime dose of $>10^{25}$ nm^{-2}. Then for small tilting movements not exceeding ≈10 mm at the top, the geometry of the groove is such that the restoring moment from the segment weight will always exceed the resisting moment due to the frictional forces, and the structure will be self-righting. Sideways tilting can be positively controlled by limiting the clearance between the outer shield floor and the segment base to <3 mm. It would be possible to include 'outrigger' bearing pads and eliminate tilting, but this complication seems unnecessary. The deflection of the base at its widest part for the static load is calculated to be <0.1 mm.

The vee-groove, accurately positioned in the floor of the permanent shield, ensures precise location of the segment in all but the radial direction. Radial positioning is achieved by attaching a tapered pin to the segment and locating

it into a mating hole in the fixed groove, Figure 5. This method of location and support permits free thermal expansion of the segment in the vertical and tangential directions: radial expansion is restrained only by frictional forces in the vee-groove. Reactive loads occur at the base due to relative thermal expansion between the fixed shield structure and the segment base, and loads imposed by the coolant pipes. These latter loads can be minimised by incorporating a bellows in the piping thermal sleeve through the reactor hall floor, as discussed in Section 4. The reactive loads are accommodated by the 0.22 m diameter locating pin, in which the shear stress is $<45\ MNm^{-2}$.

Forces and loadings on the structure due to penetration of magnetic fields through the segment have not been calculated. Any forces are expected to act normal to the structure face plate and therefore reacted by the locating pin. If the magnetic fields result in significant tangential forces tending to tilt the segment, this could conflict with the principle of eliminating reactive forces other than at the segment base. The forces could, however, be accommodated with the proviso that the small clearances at the edge of the base be replaced by adjustable bearing surfaces through which the forces are transferred.

Forces arising from field penetration can also act in the plane of the segment giving rise to turning moments, but these would be insignificant compared to the segment weight making the need for vertical restraint unlikely.

3.3 Inner shield and breeding cells

The breeding cells and inner shield are structurally passive, their weight being supported by the segment structure. The 0.35 - 0.40 m thick inner shield consists of interlocking helium cooled blocks bolted to the face plate of the structure, each block supporting a breeding cell, Figure 6.

The breeding materials are contained in Inconel 718 cylindrical pressure vessels to contain the coolant and having a range of five diameters up to 0.65 m, in order to fit into an array around the structure surface to maximise the volume of breeding material. There are ≈150 cells per segment. Neutron scattering material probably in the form of graphite inserts is fitted between the cells. The axial length of the blanket cell is ≈0.4 m, including a 40 mm thick structural base for attachment to the inner shield. The shield/cell assembly is removed either by movement normal or parallel to the segment face plate after removing the securing bolts from the front (Figure 3). Access to the rear of the face plate is restricted by the complexity of the coolant pipes.

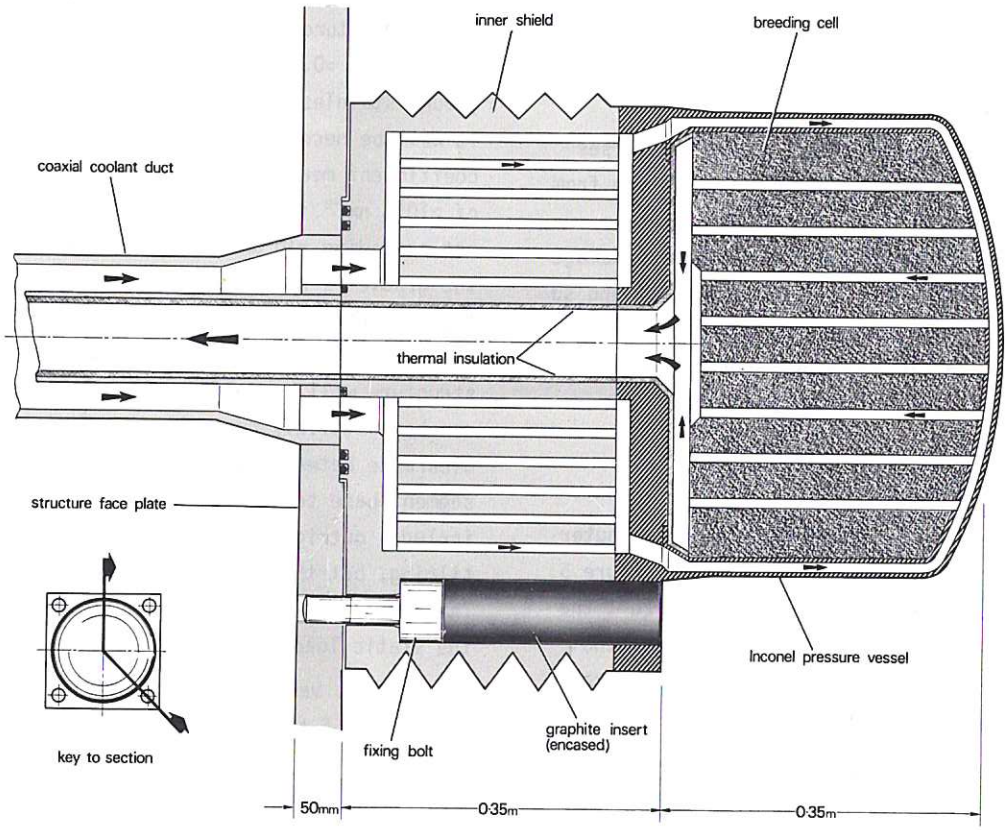

Fig.6 Conceptual design of helium cooled blanket breeding cell and inner shield.

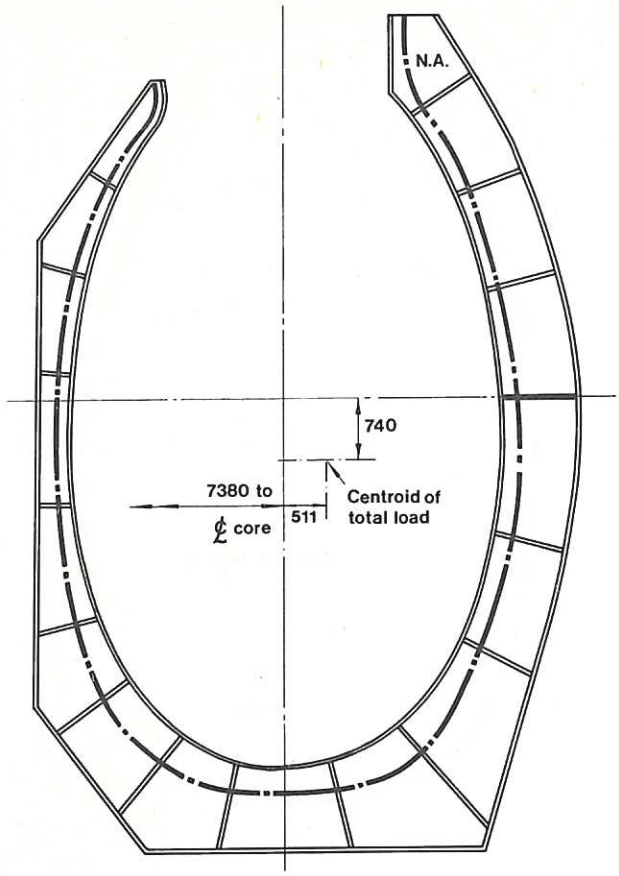

Fig.7 Outline of segment structure used in calculations showing position of neutral axis.

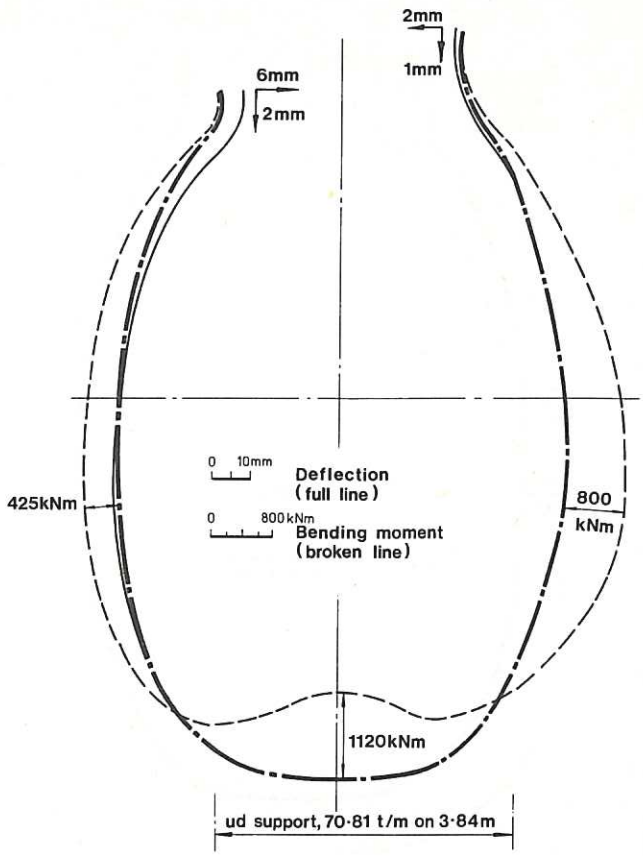

Fig.8 Deflection and bending moments in segment assembled.complete with blanket cells etc.

The cells are connected to the coolant pipes by a manifold joint (Figure 6) with seals between the rear of the inner shield and a sealing face on the structure face plate. The combination of seal element material, thickness and heat treatment determines the seal compressive load. For silver-coated 'C' section seals 6.5 mm thick, compressed 10%, the compression load is between 45 → 65 kNm^{-1} of circumference. Choosing a seal of small major diameter as indicated on Figure 6 reduces the pressure load on the bolts. An 0.65 m diameter blanket cell would require four 20 mm diameter securing bolts to maintain the direct stresses in the bolts below the design value of 137 MNm^{-2} (B.S.4882 Grade B17B).

The sealing elements in the double seal joint are fixed to the shield block by retaining rings. A tapping to the interspace between the seals provides for testing seal integrity. Using manufacturers data the estimated leakage from 3000 such joints in a reactor comprising 20 segments is 1.5×10^{-10} kgs^{-1}; this is ≈0.0015% of the helium production rate in the D.T. plasma at 5% burn-up. The pressure drop across the smaller seal positioned between the inlet and outlet gas is ≈0.1 MPa, a small helium leakage being permissible.

3.4 Calculation of deflections and stresses

The deflections were calculated for a structure having the elevation shown in Figure 7. It was divided graphically into 25 sections taken as short beam lengths, with the self weight and applied load determined for each section. This number of sections was considered sufficient to maintain graphical input errors to <5%. The average area, cross sectional stiffness and neutral axis of each section was determined and the eccentricity of the load from the section centroid measured. The deflections, bending moments, shear forces and direct forces at each joint between sections were calculated using a plane frame program processed by a Sigma 9 Computer. Proper account was taken of the distribution of bending moment along each of the beams. The deflection and bending moment curves are shown on Figure 8. Similar calculations using the same program were carried out for other loading conditions: (1) for applied horizontal loads at the top of the arms, (2) for acceleration loads treated as horizontal loads, and (3) temperature difference between the face plate and the outer plates. The results are shown in Figures 9, 10, 11 and 12.

The stresses in the structural members due

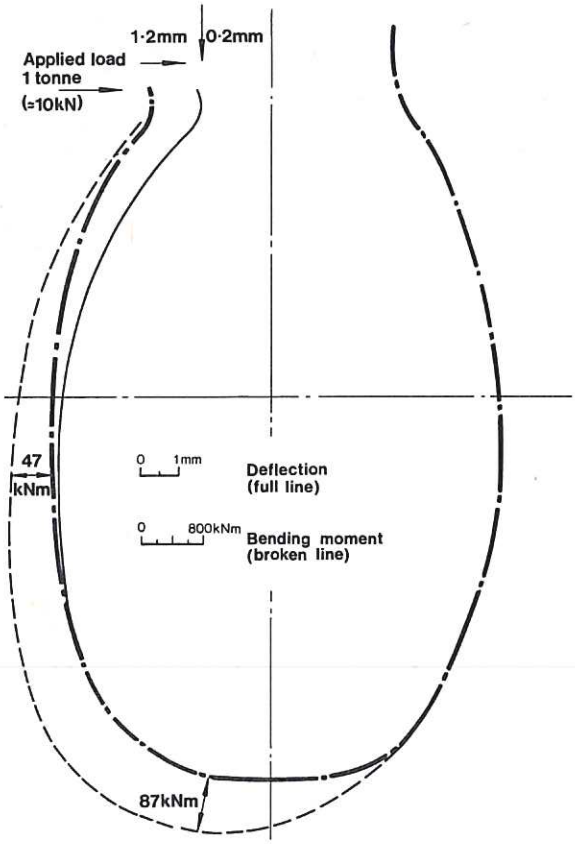

Fig.9 Deflection and bending moments in segment structure, with 1 tonne applied load at top of inner arm.

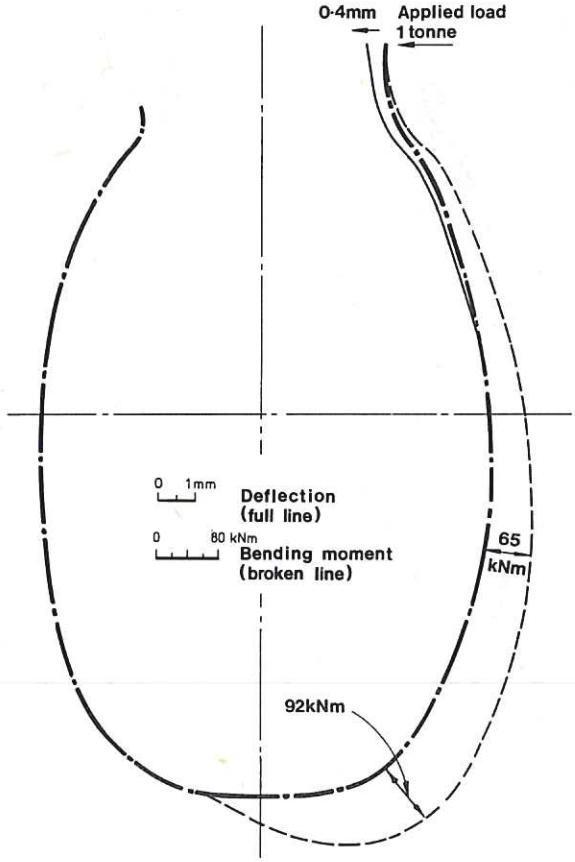

Fig.10 Deflection and bending moments in segment structure, with 1 tonne applied load at top of outer arm.

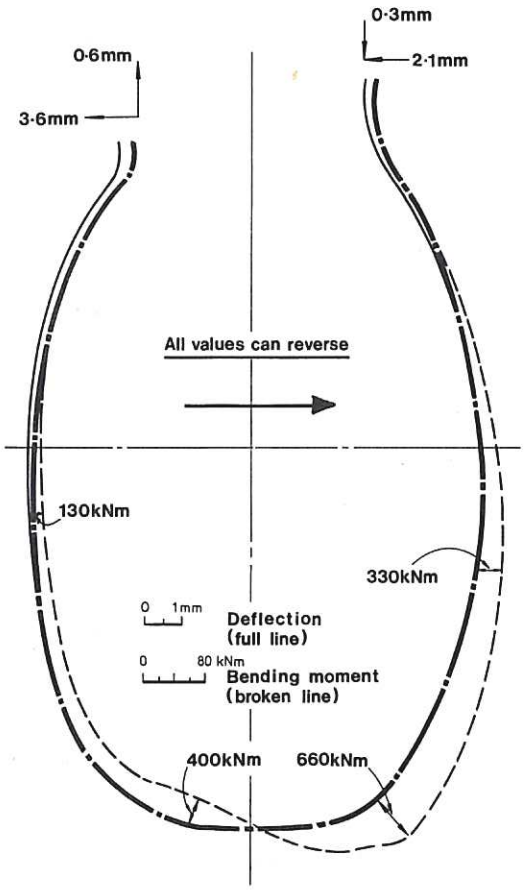

Fig.11 Deflection and bending moments of loaded segment structure due to horizontal acceleration of 1 ms^{-2} in direction of arrow.

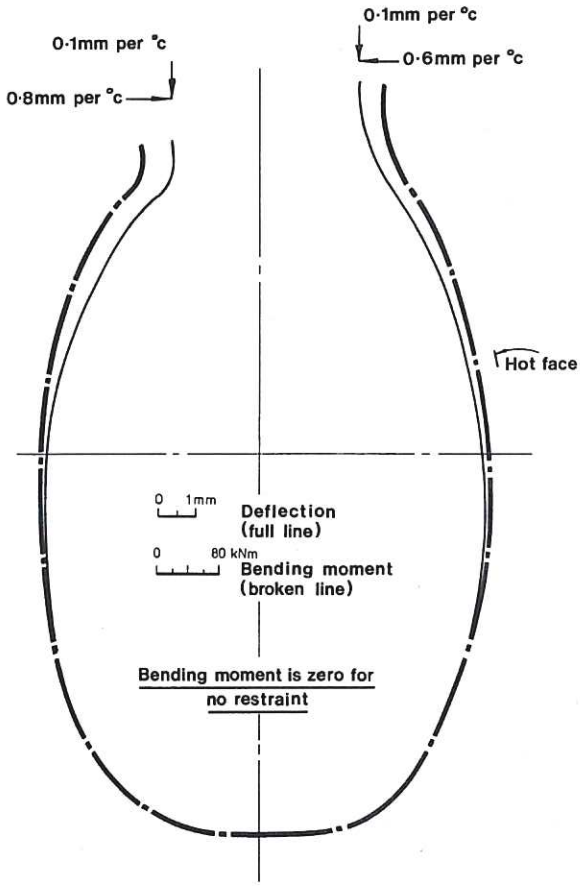

Fig.12 Deflection of segment structure due to temperature difference between inside and outside of structure.

to bending moments, shear forces and direct loads were also analysed. These are shown in Table 3 for both self weight only and for self weight and deceleration assuming a coefficient of friction of 0.2 at the base, a dynamic loading factor of 2 and a maximum permissible bending stress of 114 MNm^{-2} for Type 316 stainless steel at 350°C (ASME Section III Division 1, Table 1-1.2). The effect of buckling of the structural plates and of the arms as a whole was investigated as specified in B.S.449, using increased effective stresses and reduced permissible stresses as required in Addendum No.1 to the Standard.

The design weight of the segment is 224 t and this is less than that used in the initial stress calculations (272 t), but the calculations were not adjusted for this value.

3.5 Temperature effects

The heat generation rate in the structure was estimated to be ≈56 kW m^{-3}. This energy must be discharged either to the inlet coolant gas (350°C) or to the cooler outer shield (80°C) whilst limiting deformation of the segment due to temperature gradients in the structure. This problem was evaluated using the computer code HEATRAN[8] for models of the outer and inner arms of the structure as shown with the results in Figure 13.

Table 3

SUMMARY OF MAXIMUM STRUCTURE STRESSES UNDER SPECIFIED LOADING CONDITIONS

Position on structure	Type of stress	Stresses, MNm^{-2}			
		Weight		Weight plus dynamic loads	
Outer arm	Bending	-20*	+6*	-52	+16
	Permissible	-114	+114	-114	+114
	Direct	+5*	+5*	+5	+5
	Permissible	+96**	+96**	+96	+96
	Ratio of combined stresses to permissible	0.13	0.11	0.41	0.17
Base	Bending	+24	-11	+58	-27
	Permissible	+114	-114	+114	-114
Inner arm	Bending	-29	+15	-65	+33
	Permissible	-114	+93**	-114	+93
	Direct	+5	+5	+5	+5
	Permissible	+53**	+53**	+53	+53
	Ratio of combined stresses to permissible	0.21	0.26	0.53	0.45
Shear	Actual	8	8	24	24
	Permissible	75	75	75	75

Notes:
* Adjusted to requirements of Addendum No. 1 to BS449.
** Taken from Addendum No. 1 to BS449.

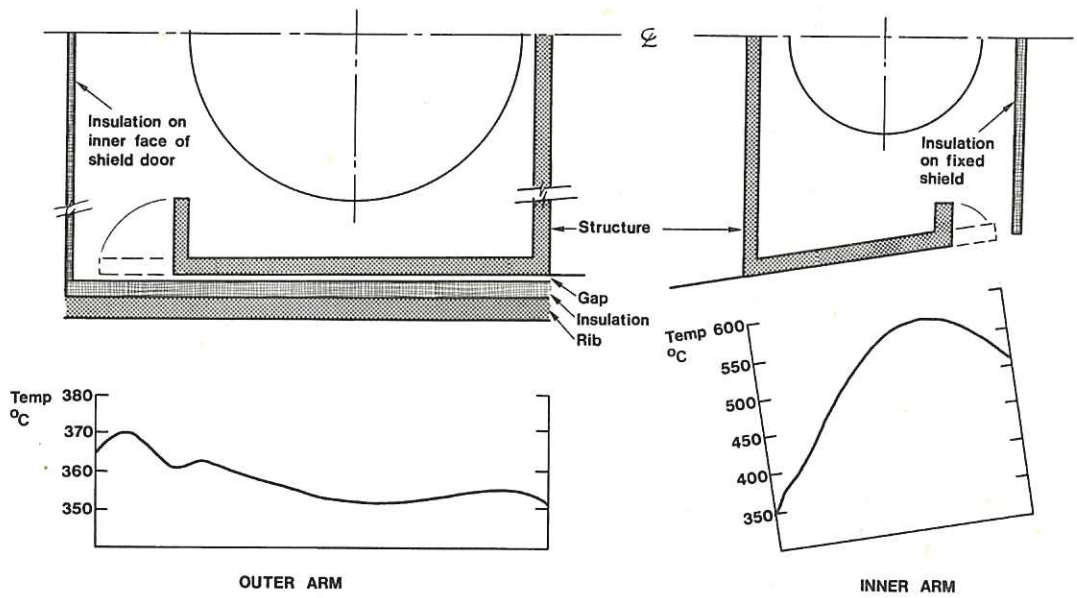

Fig.13 Model of segment cross sections and calculated temperature gradients in the segment structure.

There is a cooled rib between the outer arms of adjacent segments. By using thermal insulation on the cooled surfaces, as shown in Figure 13, the temperature difference can be limited to 16°C and from the data in Figure 12 the resulting deflection is ≈10 mm. There is no rib adjacent to the inner arm, the temperature difference in this part of the structure reaching ≈200°C and causing deflection at the top >150 mm. This deflection can be reduced by either: (1) introducing cooled surfaces between adjacent segments, or (2) by cooling the inner arm itself with helium from the main coolant pipe.

The upper exposed surfaces of the base will be at ≈350°C and it is intended that the body of the permanent shield supporting the base be water cooled to ≤ 80°C. Assuming no heat generation in the base its temperature gradient is controlled by the conductances of the base and of the heat path to the heat sink in the permanent shield, including the interface gap in the vee support. Simple calculations indicate that the temperature drop across the interface will be small and the temperature of the bearing pads will be <200°C. It is proposed to fit insulation modules either side of the vee support between the segment base and the fixed shield. These will help maintain the segment structure temperature at ≈350°C and reduce undesirable temperature gradients in the base.

3.6 Thermal insulation and neutron shielding

The inside surfaces of the fixed shield structure surrounding the segment are water cooled and thermally insulated. Layers of stainless steel foil separated by a wire mesh would form a suitable thermal radiation barrier for which considerable experience exists. In the calculations in Section 3.5 insulation having a conductance ≈5.0 $Wm^{-2}K^{-1}$ was necessary over the door surface and ≈30 $Wm^{-2}K^{-1}$ over the rib between segments, requiring layers about 10 mm and 2 mm thick respectively. This latter corresponds to only two layers of foil.

Thermal insulation is also required on the inside surface of the outlet coolant pipe (see Section 4.1). Calculations show that by using interlocking bobbins of stainless steel foil and mesh ≈20 mm thick, the heat loss per segment would be <1 MW or 0.4% of the heat produced. It is important that pipe runs are kept fairly straight in order to simplify the detailed design of the bobbins and that seals can be developed to prevent significant gas leakage between the bobbins.

In addition to the main inner and outer neutron shields, local shielding is required in all areas where, for whatever reason, there are gaps in the inner or outer shields. In these areas the shielding, in addition to providing sufficient neutron attenuation, must (1) be cooled without maximum temperatures being exceeded, and (2) be replaceable if the damage experienced exceeds the tolerable level. A particular problem area is identified in cooling the intercellular graphite inserts, which will depend upon heat transfer by conduction to the structure face plate and radiation to surrounding breeding cells. These inserts would be replaced when the segment is serviced.

4. COOLANT PIPES

4.1 Coolant distribution

Coaxial pipes with the hot outlet pipe inside the inlet pipe, distribute the helium coolant to the blanket. The maximum diameter of the outer pipe in this arrangement is ≈1.5 m and the inner pipe ≈1.0 m. The main coolant pipe bifurcates close to the base of the segment to give one main coolant circuit serving each arm of the structure. Coaxial branch connections, Figures 14 and 15, take the 350°C inlet gas to each blanket cell where it sweeps up an outer annulus of the cell to a small plenum at the front, Figure 6. From here it flows through the main heat generation regions, first the lithium lead and then the lithium orthosilicate region. At the cell outlet the gas temperature is ≈700 - 750°C. The gas then flows into the inner of the coaxial pipes and out of the segment to the steam generator. The design pressure acting on the outside of the inner pipe is about 0.1 MPa[9], ≈80% of the pressure loss occuring in the cells. Gas velocities up to 60 ms^{-1} give rise to considerable forces making it necessary to support the inner pipe.

For reasons given in Section 4.2, the main coolant pipes are attached rigidly to the structure. Over most of its length the pipe fits within the bounding dimensions of the fixed shield with the exception of a short length at the mid-point of the inner arm. In this region the inclusion of the ≈0.7 m diameter coolant pipe requires an increase in the major radius of the torus of ≈0.5 m, as illustrated in Figure 14.

Fabrication problems are reduced if individual connections from the main pipe to each blanket cell are used instead of T-junctions in

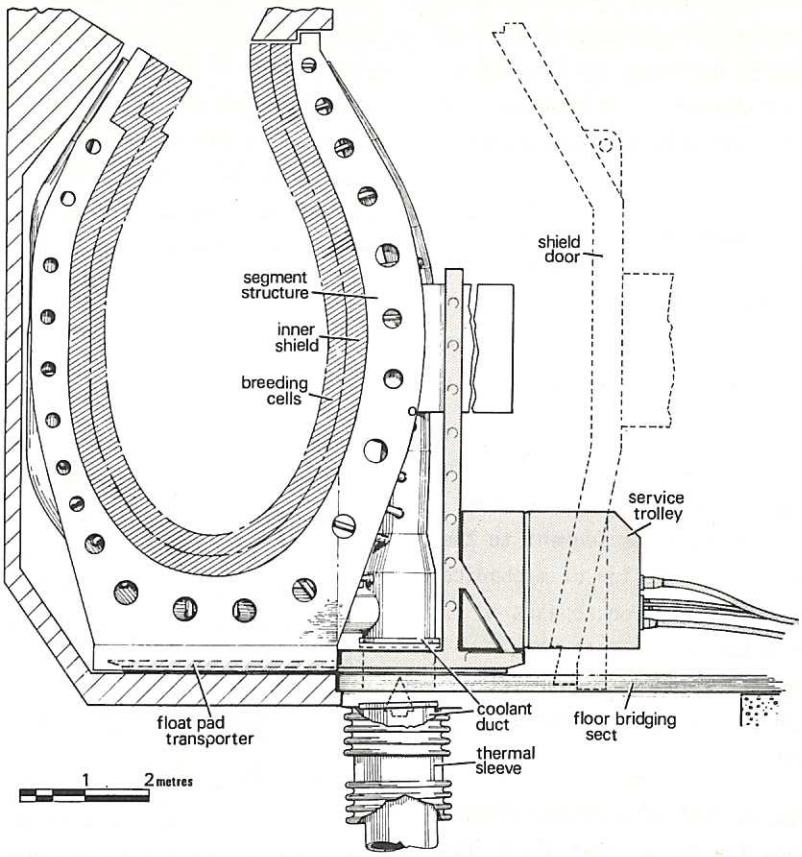

Fig.14 Side elevation of segment indicating the position in fixed shield.

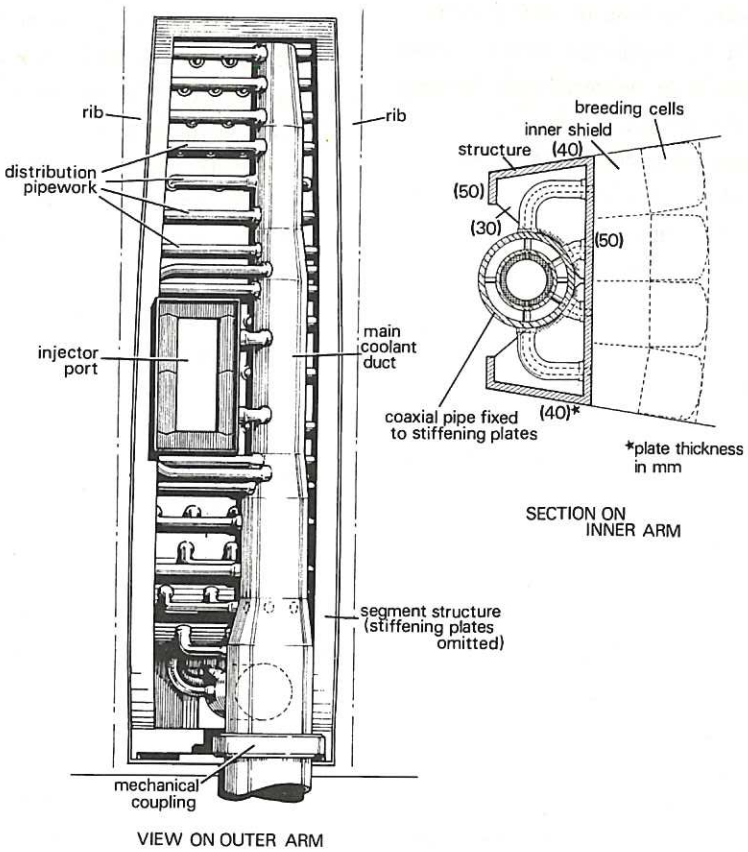

Fig.15 Conceptual arrangement of blanket segment with concentric coolant ducting.

branch connections. In some parts of the segment, for example close to the pipe bifurcation, space is very limited and it may be difficult to completely avoid T-junctions or sub-headers. A detailed design study will be necessary to be conclusive about this.

The segment structure must be cooled during the replacement operation and the main coolant circuit isolated, auxiliary inlet and outlet coolant connections must be provided. This is an unwelcome complication requiring detailed design study.

A major operation in the replacement of the segment is the parting and rejoining of the main coaxial coolant pipe connecting the segment to the steam generator. An existing design of mechanical joint[6] suitable for remote operation appears to have high development potential to meet this requirement. This is indicated in Figure 14, with the fixed section of the pipe lowered for removal of the segment.

Where the main coolant pipe passes through the fixed outer shield, the design must allow for: (1) lowering the fixed section of the coolant pipe, (2) the temperature difference between the pipe and the surrounding fixed shield, and (3) any reaction forces between the segment and the fixed coolant pipe due to, for example, bending or differential thermal expansion. It is suggested that a thermal sleeve with bellows should be incorporated between the coolant pipe and the shield as shown in Figure 14. The bellows required would be an unrestrained double unit ≃1.7 m diameter and ≃2 m long, the centre tube designed for vacuum. We believe there would be no difficulty in obtaining such a unit. The horizontal load on the segment resulting from differential thermal expansion between the segment and the fixed shield is estimated to be ≃0.5 t. However, these aspects are part of the fixed pipe design requirements and are outside the scope of this study.

4.2 Structural support of piping

Two design options have been identified. The first is to support the main coolant circuit from the base, relieving it from bending stresses imposed by bending of the structure. This method of support would, however, impose large deformations and stresses in the branch connections which are connected to the structure at the rear of the blanket cells. It is a feature of the proposed design that the branch connections do not incorporate bellows, both pipes of the coaxial arrangement and the structure being designed to operate at nominally the same temperature. The alternative is to integrate the main coolant circuit with the structure by welding it to the stiffening webs, the pipes then taking a proportion of the bending loads. Furthermore, the branch connections can be laid out to have relatively low structural stresses and for that reason this seems a favourable option.

The plane frame analysis (Section 3.4) was used to calculate the stresses in the combined 'pipe-structure' arrangement. The longitudinal stresses in the main pipes due to bending are ≃20 MNm^{-2} as compared with ≃12 MNm^{-2} for the first option where the pipes are supported from the base. The effect of integrating the pipe and structure is to reduce the complexity of the segment design, with the added bonus of reducing the deflections at the top of the arms.

5. SEGMENT FABRICATION

5.1 Structure

The design concept requires that close tolerances are maintained during fabrication of the structure. In particular, to be compatible with the tolerances given in Section 2.4 the distance across the gap formed by the open arms of the structure should be to an accuracy of <5 mm. It is proposed that the structure be fabricated from a number of sub-assemblies, these being welded together to make the whole, with any corrective action being possible at each stage of assembly. The overall size and weight of the structure may prohibit transport from a fabrication shop to the reactor site, making it likely that the final assembly would take place local to the site. Rolled stainless steel plate up to 50 mm thick can be formed and machined to the required tolerances for the sub-assemblies to be welded together.

Two attractive welding techniques have been identified; electron beam and narrow-gap welding. Both methods produce narrow, essentially parallel-sided welds to minimise distortion due to non-uniform shrinkage. Electron beam welding is a single-pass operation requiring no plate 'weld-preparation', but the process does require a vacuum environment. Vacuum chambers large enough to accommodate the structure are available or alternatively local vacuum techniques can be used. In one such local vacuum arrangement the face of the structure would be sandwiched between the supporting side plates and then welded to them using an electron beam gun mounted on a carriage driven

on rails around the inside surface of the face plate. Vacuum requirements are satisfied either by the carriage sliding on a chamber located directly on the workpiece via static seals, or by using large chambers clamped onto the supporting side plates. This method of fabrication has the advantage that shrinkage, ≈0.25 mm per weld, is limited to the axial direction and can therefore be easily allowed for.

The second welding technique is a recent development of the Tungsten Insert Gas (TIG) process in the form of 'narrow-gap' welding. Although the method produces a weld similar to that obtained from an electron beam, the operation is multi-pass requiring a weld preparation on the mating surfaces. The technique has been used for remote orbital welding of large diameter pipes with wall thicknesses up to ≈65 mm.

From a preliminary survey of welding techniques we conclude that fabricating the support structure to within ±5 mm would probably be practicable, should this order of accuracy be required. Electron beam welding equipment is currently available for performing distortion-free welds on thick section stainless steel of fairly complex shapes, although vacuum requirements need careful consideration. Less sophisticated narrow-gap welding is attractive because it requires considerably less complex equipment and facilities.

5.2 Pipework

Today the manufacture of large diameter thick wall stainless steel pipe is not a problem. Seamless pipe up to ≈1.0 m inside diameter and wall thickness 40 to 100 mm can be extruded in lengths up to ≈6.0 m. Larger diameter pipe can be made in short lengths using press forging or by seam-welding rolled plate.

The concept of the complex coaxial pipe fabrication with bends and many branch connections is novel and will require detail design studies and development to establish a practical construction method. There are numerous difficulties; for example, the fabrication of the outer pipe, the assembly of the hot pipe inside the outer pipe, connection of the cooling circuit to the structure within the limited space available, and determining suitable techniques for the inspection of pipe welds. These problems have been discussed with pipe manufacturers, with the following results.

Conventional pipe fabrication is often carried out using submerged-arc or TIG welding. On thick section pipework, however, the effect of shrinkage and distortion may be appreciable with welding often limited to the horizontal/flat position. Orbital narrow-gap welding is a recent development of TIG welding applied to automatic joining of thick walled pipes. The equipment for narrow-gap welding consists of a drive carriage located by, and driven around, a guide ring clamped to the pipe. Automatic travel and filler wire feed is used with welding speeds of ≈50 mm per minute possible for a gap ≈10 mm wide. The system, like other remote welding techniques, requires a clearance around the pipe of ≈0.5 m, which may limit its application to branch connections for which smaller 'clamp on' weld systems are available.

Manufacture of the large T-junction, located at the bifurcation of the main coolant circuit, is possible using a multiple ram forging process. Closed die forging presses are currently able to produce complex shapes with multiple cavities, having dimensions approaching those of the T-junction. The thinner wall inner pipe is more easily fabricated if the numbers of T-junctions and changes of cross sectional area of pipes are limited. Therefore each module is connected individually from the main coolant circuit, Figure 15. The inclusion of elbows would be advantageous to provide flexibility, also a large annular space between the inner and outer pipes would simplify assembly. Axial locating fins in the annular space are necessary although it may be preferable not to weld the fins to both pipes to allow adequate flexibility.

It is possible to join simultaneously the inner and outer pipes of the branch connections using electron beam welding. By focusing the beam at the mid-point of the annulus it can be made to penetrate and weld both pipe walls. There remains, however, the problem of ensuring accurate location of the two joints and performing post-weld inspection and testing which is particularly difficult on the smaller diameter pipes.

It cannot be concluded from this study that fabrication of the coaxial coolant pipe system is practical. Final assembly of the pre-fabricated pipework is complicated by the limited amount of space available and the restricted access to the region behind the segment face plate. In particular, a satisfactory method of non-destructive examination of the welds on the assembled pipework cannot be suggested. Double-wall radiography of a coaxial pipe arrangement does not seem possible and ultrasonic methods may be difficult to apply even if the problem of

examining coarse grain structure stainless steel can be overcome by further development work.

6. SERVICE OPERATIONS AND TRANSPORT

6.1 Means of movement

After moving the poloidal field coils, disconnecting service lines and the main coolant pipe, and removing the shield door, the segment is accessible for withdrawal between the toroidal field coils. Figure 14 shows diagrammatically the coolant supply decoupled and the pipe on the steam generator side lowered. A bridging section is shown in position for continuity of floor level between the fixed shield and the reactor hall. The insulation modules positioned under the segment base are replaced by float pad transporters. These transporters, see Figure 5, contain circular gas film bearings inflated by compressed gas from the service trolley. Increasing the gas pressure in the pads above that required to support the load results in an escape of gas from the bottom face of the bearing, and the load becomes free-floating. With friction virtually eliminated between the bearings and the floor surface, the segment can be easily moved in any direction as it floats on a gas-film. A typical value for the draw-bar pull is <0.1% of the load, or ≈ 250 kgf (600 lbf) for the complete segment.

Float pads are commercially available and data from some applications have been compiled (Table 4). From discussion with manufacturers, we have concluded that the requirements could be achieved with some development work. The stability of the tall segment must be ensured, which requires a very smooth floor surface, a steady pressure gas supply and the draw-bar pull applied in a controlled manner. To avoid spreading activated dust which may be present, a gas recovery system is proposed (Figure 5) in the form of gas extract via a peripheral slot in the base and spaces between adjacent float pads.

The maximum dynamic load which may be applied to the structure determines the maximum speed of movement of the segment. Dynamic loads may arise from a number of normal and abnormal

Table 4

TABLE OF PARAMETERS FOR VARIOUS FLOAT PAD APPLICATION

Application	Load t	Pad operating pressure MPa	Load height m	Ratio: Load C of G to Base width	Required accuracy of positioning	Floor * surface finish
proposed reactor segment	275	0.55	11	2.0	High	10
1. GEC Transformer	600	0.29	4	1.0	Medium	7
2. GEC Rotor	180	0.30	2	1.0	Low	5
3. High voltage test tower	25	0.07	15	4.0	Medium	7
4. Harvard University	95	0.55	3	1.5	High	9
5. Aloha Stadium Hawaii	1750	0.25	40	1.0	Medium	6
6. Kobe Steel Japan	1000	0.28	5	1.0	Medium	8
7. Smit Transformers Holland	800	0.38	6	1.0	Medium	8
8. Boeing 747 Seattle	175	0.12	14	0.5	High	6

Note: * Grade: 0 - rough concrete
10 - 'glass' finish

operations including deceleration resulting from rapid loss of gas pressure in the pads while in motion. When this happens the coefficient of sliding friction will be ≈0.2, and the deceleration ≈0.2 g: From Figure 11 the dynamic deflections on the inner and outer arms are ≈15 mm and ≈9 mm respectively. The stresses arising from these deflections are shown in Table 3, and are within the permissible values. Whilst the deflections and stresses are independent of the speed of motion, they determine the stopping time and distance. To keep the stopping time <0.25s, the speed of motion should not exceed ≈0.4 ms^{-1}.

An alternative to the vee-groove guidance arrangement is necessary in the reactor hall, possibly in the form of sensors embedded into the floor.

6.2 Sequence of operations

Parting of the main coolant pipe is a major operation in the segment replacement sequence[1], and has been studied in detail in Reference 6. However, as described in Sections 2.5 and 4.1, it will be necessary to include the coupling of auxiliary shutdown cooling.

During the removal of the shield door and disconnection of ancillary services, the coolant mass flow is reduced to a level just sufficient to remove afterheat. The shutdown coolant supply from the service trolley can then be coupled-up, and the main pipe disconnected by releasing the mechanical coupling.[6]

After removal of the locking pin and inflation of the float pads, the segment can be withdrawn by a powered tractor via a linkage system which is rigid in the transverse direction. Following withdrawal the segment can be turned through 90° by remote steering of the powered tractor, ready for movement out of the reactor hall.

The sequence of operations for segment replacement is the reverse of that described above. The above sequence draws attention to a number of operations where further work is required:

(a) The instrumentation and other services to be disconnected after removal of the vacuum door have not been considered.

(b) The necessity for shutdown cooling introduces extra severe requirements on the main coolant pipe and service trolley. The trolley will be equipped for the gas supply and recirculation to the transporter float pads. The trolley may also supply the gas for shutdown cooling, but in this case the return gas requires cooling before it can be recirculated to the segment. This can be achieved by passing it through a water-cooled heat exchanger mounted on the trolley, although the trolley would need to be large in order to carry the necessary equipment. It is envisaged that the shutdown coolant supply will be low pressure, high volume requiring pipe connections ≈0.5 m diameter.

(c) The design of the coolant pipe outside the thermal sleeve and a means of lowering it through the outer shield (see Section 4.1), has not been investigated.

(d) As an alternative to (c) above two mechanical couplings could be used requiring merely the withdrawal of a section of pipe.

(e) The service trolley/tractor design requirements must be carefully analysed.

Following the pattern of the operations schedule[1], the revised sequence of the major operations for segment replacement together with time estimates is given in Table 5. Durations are inevitably subjective because of the lack of detailed design information, but they are based on the time required for: (i) checking that the necessary setting-up is completed before an operation is initiated, (ii) execution of an operation, and (iii) checking that the operation has been completed.

Excluding the time for disconnection of the main joint the time estimate for segment removal is ≈8.0 hours, compared to the target time of 5 hours[1] (see Table 5).

7. CCTR II WITHOUT DIVERTOR

In the event that a pulse-burn Tokamak reactor is shown to be practicable without the complications of a divertor, we have studied the structural design of a blanket segment as described in the original studies of the CCTR II, i.e. with the structure closed at the top, forming a complete ring.

The blanket and shield weight distribution were estimated for the ring structure segment, and using the same plate thicknesses the plane frame analyses were carried out to determine the deflections and bending moments (see Figure 16). These are generally reduced except at the base where a small increase in the maximum bending moment from 1120 kNm to 1390 kNm can easily be

Table 5

ESTIMATED DURATIONS OF SEGMENT REMOVAL OPERATIONS

Item / Operation	Setting up	Execution h	Checking h	Total h
1. Connect shutdown cooling gas				
1.1 Connect shutdown coolant supply connections and test	0.5	0.5	0.5	1.5
1.2 Isolate main coolant supply and start shutdown cooling	0.1	0.1	0.3	0.5
2. Disconnect main coolant pipe joint (see Ref. 6)				(4.0)
3. Position bridging floor plate				
3.1 Lower bottom section of main coolant pipe	0.25	0.25	-	0.5
3.2 Insert floor bridging section	0.2	0.5	0.3	1.0
4. Remove segment				
4.1 Move in segment trolley adjacent to segment	-	0.1	0.1	0.2
4.2 Remove insulation pads. Locate float pad transporters and test	-	1.0	0.5	1.5
4.3 Withdraw locking pin	0.1	0.2	0.2	0.5
4.4 Couple segment to trolley	0.1	0.2	0.2	0.5
4.5 Inflate float pads	0.1	0.1	0.1	0.3 *
4.6 Withdraw segment radially	0.1	0.5	0.1	0.7
4.7 Turn segment through 90°	0.1	0.3	0.1	0.5
4.8 Remove segment to reactor hall	-	0.5	-	0.5
Total excluding disconnection of coolant pipe joint				7.9

Note: *Carried out in parallel with operation 4.4.

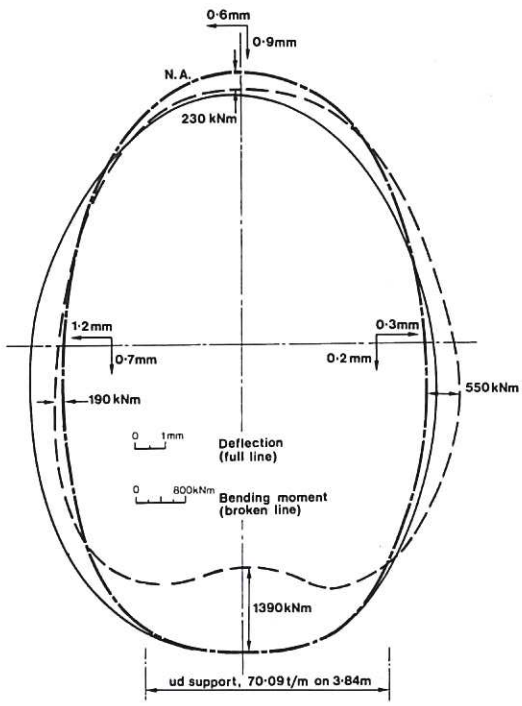

Fig.16 Deflections and bending moments in ring structure blanket segment complete with blanket cells.

tolerated. The maximum radial deflection in the ring structure is 1.2 mm, at the mid-point of the inner upright.

In the ring structure the bending moment due to temperature gradient occuring at the top and outer arm is $\simeq 1.5 kNm^{o}C^{-1}$, which for a temperature difference of $16^{o}C$ (see Section 3.5) gives displacements <1mm. On the inner arm the bending moment is $0.5 kNm^{o}C^{-1}$ giving a displacement of $\simeq$ 6mm for a temperature gradient of $\simeq 200^{o}C$ (see Figure 13). Even this displacement can be tolerated without exceeding design stress levels. There is, however, no case for making significant changes to the plate thickness in the ring structure.

The layout of the coolant pipe in the inner arm of the structure (Figure 14) requires an increase of the major radius $\simeq$0.5 m (Section 4.1). In the ring design, the breeding cells in the upper region of the segment can be served by a coolant circuit extending over the top of the structure.

The coolant circuit could then be accommodated without any increase in the reference major radius of 7.4 m. Changing the coolant pipe layout in this way results in longer pipe runs to some of the hydraulically remote blanket cells which, although few in number, may result in a small increase in the overall coolant gas pressure drop.

Finally, without a divertor the interface between the structure and divertor is eliminated, as is the need for small clearances between these structures (Section 2.4). Thus, whilst conceptually unimportant a number of detail design problems of neutron shielding, cooling and thermal insulation are eliminated along with the larger problem of the divertor.

8. CONCLUSIONS

A conceptual design of structure has been evaluated for the Culham Conceptual Tokamak Mk II Reactor which will support the inner shield and blanket cells, and the gas coolant pipes. The design of the horseshoe shaped structure is governed by deflection rather than stress. It is supported on a base from the fixed shield structure on a single vee-in-groove, and located radially by a dowel. The coaxial coolant pipes form an integral assembly with the structure which is designed to operate close to the coolant inlet temperature of ~350°C. Although there are problems associated with the fabrication of the assembly, preliminary discussions with a number of manufacturers indicate that with the correct detailed design, the concept is feasible.

The segment assembly weighing ~224 t is designed to be easily removed from the reactor for periodic servicing operations, using inflatable gas operated lift pads.

A number of requirements have been identified which require further evaluation studies and may lead to some changes in the reactor concept. These are:

(1) The demands for space, and in particular for the coolant pipe on the inside arm of the segment, require the major radius of the torus to be increased by ~0.5 m.

(2) Control of the temperature gradient across the inside arm of the structure, either by a cooled rib between the segments or by local cooling pipes on the structure.

(3) The blanket cell structure and inner shield require cooling (by gas circulation) during the service operation. This complicates the main coolant gas circuit which now requires an isolation valve and shutdown cooling gas inlet and outlet connections. A heat sink on the service vehicle will also be necessary.

The equivalent structure for a reactor without divertor was also investigated. In general the displacements of this structure were less. Also it has the advantage of a coolant circuit layout which does not require an increase of the major radius.

9. ACKNOWLEDGMENTS

The authors would like to thank a number of people for their assistance with the work described in this report including
Mr. D.L.D. Marsh of the Structural Division of W.S. Atkins and Partners, for carrying out the plane frame analyses on the structure and for his helpful comments in other areas:
Dr. C.D. Newman for the calculation of temperature distribution in the structure using HEATRAN;
Mr. G.H. Firmin for calculations of the distribution of the shutdown heat in the blanket and structure:
and Mr. J.T.D. Mitchell of Culham Laboratory for his helpful advice and comments.

We are also indebted to a number of companies for finding time to advise on fabrication techniques and feasibility, including Aiton & Co., Applied Technology Company Ltd., Cameron Iron Works Ltd., Hawker Siddeley Dynamics Engineering, Rolair Systems (UK) Ltd., and Sciaky Electric Welding Machines Ltd.

10. REFERENCES

1. Mitchell J.T.D. and Hollis A. A Tokamak reactor with servicing capability. 9th SOFT Conference - Garmisch-Partenkirken, Germany, June 1976.

2. Mitchell J.T.D. The impact of servicing requirements on Tokamak fusion reactor design. Fusion Reactor School of Technology Erice, September 1976.

3. Fusion Engineering Staff. Conceptual design study of a noncircular Tokamak demonstration fusion power reactor. GA-A13992. November 1976.

4. Stanbridge J.R., Shotter H.A. Review of irradiation creep and swelling in a fusion reactor blanket cell structure. CLM-R152 (1976).

5. Tsui E.Y.W., Marron J.V. and Brown A.T. "Interim stress design criteria for LMFBR vessel and core structures", General Electric Report GEAP-13719, May 1971.

6. Briaris D.A., Stanbridge J.R. The feasibility of remotely separating and re-joining the main coolant pipes of a fusion reactor. CLM-R.174 (1977).

7. Blow S. Some features of the behaviour of structural materials in a possible fusion reactor blanket. BNES Journal 11(4) pp 371-376, December 1972.

8. Collier W.D. The solution of heat transfer problems using HEATRAN. TRG Report 2512(R) July 1976.

9. Shock R. Private communication AERE Harwell, November 1977.

10. Carruthers H.M. Structural design of demountable blanket elements and shield for a fusion reactor. CLM-R.151 (1976).

HER MAJESTY'S STATIONERY OFFICE

Government Bookshops

49 High Holborn, London WC1V 6HB
13a Castle Street, Edinburgh EH2 3AR
41 The Hayes, Cardiff CF1 1JW
Brazennose Street, Manchester M60 8AS
Wine Street, Bristol BS1 2BQ
258 Broad Street, Birmingham B1 2HE
80 Chichester Street, Belfast BT1 4JY

Government publications are also available through booksellers