CLM - R 185

CLM - R 185

UKAEA

Report

SURFACE MODIFICATION AND WELDING BY LASER

J H P C MEGAW
A S KAYE

CULHAM LABORATORY
Abingdon Oxfordshire
1978
Available from H. M. Stationery Office

C/14

£1.00

CLM-R 185

SURFACE MODIFICATION AND WELDING BY LASER [†]

J.H.P.C. Megaw and A.S. Kaye
UKAEA Culham Laboratory, Abingdon, Oxon, OX14 3DB, UK.

ABSTRACT

Some of the surface treatment (hardening by martensitic transformation, production of overlay and diffusion coatings, creation of rapidly quenched layers) and welding applications of cw CO_2 lasers with powers of around 5 kW are discussed. The underlying principles are described, and results are presented which serve to highlight the special characteristics of the processes, and to indicate the areas of manufacturing technology where the processes are particularly suited for adoption.

....

[†] Paper presented at Laser-78 Conference, London, 9th and 10th March 1978, organised by Engineers Digest.

April 1978

SBN: 85311 064 6

1. INTRODUCTION

The aim of this paper is to discuss some of the surface treatment and welding applications in manufacturing technology of cw CO_2 lasers with powers of around 5 kW. To the production engineer, the attractions of using a laser lie in the high speeds of operation and the localisation of the process; wear or corrosion resistant properties can be enhanced just where required on components, and welds can be carried out very reproducibly with minimum distortion.

The electrically excited carbon dioxide laser is the system at present most amenable to the efficient and reliable production of high continuous beam powers; its commercial development has now reached a stage where at least four manufacturers offer models at the 1-2 kW level, two manufacturers offer models at the 5 kW level, and one manufacturer offers a 15 kW model. Such lasers are and will be most efficiently employed in high volume production; at around 5 kW, the associated welding capability (at present about 8 mm in steels) and surface treatment rates appear well matched to a sizeable potential market.

The laser beam can be regarded simply as a means of producing accurately controllable heating of the workpiece, and the beam has the ability to be projected long distances in air, and to be manipulated and directed into conventionally inaccessible regions. The power density (or beam spot size) at the workpiece can be matched to the process; a well-focused spot is employed in welding, whereas a more diffuse heat 'pattern' is chosen for solid state transformation hardening.

2. BACKGROUND

Whilst this paper will partly review worldwide laser applications, it will also describe some of the work carried out in the Laser Applications Group at the UKAEA Culham Laboratory. One of the Group's roles is to advise and help British industry concerning materials processing by laser; trials and contract research, often leading to prototype and production systems development, are carried out for customers. Much of the work utilises commercially available lasers, but a parallel programme on laser development has led to the availability of a range of lasers of powers up to around 20 kW, one of which is an industrialised 5 kW model CL5.(1)

These lasers have been developed specifically for applications in industry, which dictated the need for high overall efficiency and compactness; they are therefore based on electrical excitation (without auxiliary ionization) with fast, recirculated convection of the laser gas through the discharge. The current, gas flow and optical axis are orthogonal and a folded, two pass discharge and unstable optical resonator are employed to reduce the overall dimensions and maintain good beam mode control. The lower power density associated with the relatively large cross sectional area of the unstable cavity enables zinc selenide to be used with high reliability as the output window at medium powers, but at high powers an 'aerodynamic' window is used to transmit the beam into the atmosphere.

3. SURFACE HARDENING BY MARTENSITIC TRANSFORMATION

3.1 Introduction

The successful operation of a wide range of engineering components like gears, blades and shafts relies on surface heardening; crucial in these components is the combination of a core having high strength and toughness and a surface having high hardness and wear resistance. The hardness can be localised to the surface either by diffusing in to a controlled depth suitable additions (for example as in the nitriding and carbonising processes), or by starting with an appropriate alloy which undergoes a phase transformation at the surface when it is there suitably heated and quenched. We confine ourselves here to the latter category and discuss the role of lasers as the heat source.

The phase transformation involved in a large number of these components is that of martensite formation in the iron-carbon system. We recall that if the alloy is heated to a temperature at which an austenitic structure exists, i.e. where it consists of a solid solution of carbon in gamma iron, and is then cooled above a critical rate, the normal lower temperature equilibrium components of pearlite with ferrite or cementite do not have time to form, but a very hard metastable solution of carbon in alpha iron, know as martensite, results instead.

When using lasers as the heating source, they are normally operated in a power density regime very much higher than flames, but possibly comparable with eb, arc plasma and induction heating sources. However, the laser can be uniquely distinguished from these last three by one or more of the following attributes:

(a) it characteristically operates as a rapidly scanning source so that overall heat input (and therefore distortion) is minimised, and adequate quenching rates are obtained solely by conduction into the substrate;

(b) the rapid scanning can take place in atmosphere at long working distances from the source, and the beam can be manipulated and directed into bores and conventionally inaccessible regions without the hindrance of supply cables and pipes;

(c) its heating pattern may be rapidly altered to suit the application.

3.2 Process

Below their melting point metals are poor absorbers of the infrared energy. An absorbing coating is therefore a prerequisite for efficient heating; fortunately suitable coatings (e.g. colloidal graphite) can be easily applied, with the advantage that selective application results in selective hardening. With a suitable coating, absorptivities of about 90% are observed.

Whilst in some applications a suitable heat pattern at the workpiece can be obtained by operating at an appropriate distance from the focal plane of a simple lens or mirror (and perhaps additionally arranging for laser multimode operation), in many cases the requirement of uniform intensity over larger areas indicates use of alternative techniques. One such which we have used successfully is shown schematically in Fig.1; the annular output beam from the unstable cavity of the laser undergoes reflection at small angle from a mirror consisting of eight individually aligned segments, each behaving as a cylindrical focus element. The images are suitably overlayed to yield a uniform rectangular pattern, length b being determined by the segment length and width a by the proximity to focus.

A technique offering greater flexibility although requiring somewhat greater technical sophistication, involves rastering the focused beam spot (at speeds sufficiently high to avoid surface melting) to generate, say, a rectangular pattern at the workpiece; a mirror or mirrors vibrating on two axes may be used, and with careful design the effects of prolonged dwell time at the limits of the raster can be minimised, and the amplitudes can be made variable to suit individual components.

The hardening cycle may be considered in three stages:

(a) heating a layer above austenising temperature (A_3);

(b) holding there for a sufficient time for the carbon to go into solution;

(c) quenching rapidly.

The timescale in laser hardening is very significantly shorter than that in conventional techniques and much detailed investigation of the metallurgy remains to be done. However, useful guidance into the practical application of the technique is afforded by the use of heat flow calculations. The case of a heat source with gaussian intensity distribution moving over a substrate has been treated,(2) but since we have been concerned mainly with sources uniform over areas much larger than the skin depths of interest, we have used one-dimensional analyses, and furthermore have approximated to the moving source by a heating pulse of duration equal to the beam dwell time.

The time dependent solution for the temperature θ along the z axis perpendicular to the surface of a semi-infinite solid exposed to a heat flux F is(3)

$$\theta_z = \frac{2F\sqrt{kt}}{K} \; \mathrm{ierfc} \; \frac{z}{2\sqrt{kt}} \qquad \ldots(1)$$

where K is thermal conductivity
k is thermal diffusivity
t is time of application of heat flux.

At shallow depth, for heat inputs of interest here, the peak temperatures reached are given approximately by θ_t when $t = \tau$ the beam dwell time.

Additionally we have used a computer programme$^{(4)}$ based on a numerical solution of the one dimensional problem of a plate of finite thickness subject to a heat flux for a specified time on the front, and insulated at the rear. The programme takes account of melting and heat loss by radiation, and plots time resolved temperature profiles in the plate.

To gain some insight into the process, it is convenient to consider predictions and results for a carbon steel, say $K = 0.35$ watts $cm^{-1}\ {}^{o}C^{-1}$, $k = 7.3 \times 10^{-2}\ cm^{2}\ s^{-1}$, melting point $\theta_m = 1500^{o}C$, $A_3 = 800^{o}C$. The amenability of such a steel to heat treatment is conventionally expressed in the isothermal transformation diagram, right hand side of Fig.2; when a sample, previously heated above A_3, is quenched into a bath of fixed temperature (indicated on the vertical axis), the progress of the transformation is shown by following along an abscissa through that temperature. For example, when quenched into a bath held constant at 500°C, Ferrite starts to form after about 0.8 s, cementite 1 to 2 s and the transformation is complete after 5 s. Martensite will result if temperatures below 350°C can be achieved in times less than about 1 second.

The left hand side of the Fig.2 shows the computed temperature-time history at (a) the surface and (b) depth 0.5 mm for a 10 mm thick sample subject to a power density of $3 \times 10^{3}\ W/cm^{-2}$ for a dwell time of 0.2s. It is seen that quenching rates strongly favour martensite formation, and that holding times above A_3 are short - even on the surface they are only of order 0.15s. In the resulting microstructure (Fig.3) the surface, where the carbon has been taken into homogeneous solution, is fully martensitic while further into the layer considerable hardening is still observed although the short time at elevated temperature results in much less homogeneity. The upper part of Fig.5 plots a microhardness scan for such a layer. Fig.4 shows a micrograph of similarly treated pearlitic cast iron, and the lower part of Fig.5 shows the corresponding microhardness scan.

Still for carbon steel, Fig.6 shows computed values of the depth raised above A_3 as a function of the reciprocal of the dwell time (which is proportional to the beam scan speed in our approximation) for four values of the beam power density; the threshold conditions for the onset of surface melting are marked by a broken line. Also shown are experimentally observed depths of hardening for samples having an absorbing coating which were traversed under a line focus approximately 25 mm long and 3 mm wide. Laser powers of 2.25 kW and 4.5 kW gave power densities of 3×10^4 and 6×10^4 W/cm^{-2} respectively.

The agreement between prediction and observation is encouraging, and present work includes investigation of means of achieving greater case depths, where the overall heat into the workpiece increases and cooling rate suffers.

3.3 Discussion and Applications

Those materials most readily hardened by conventional techniques tend to be most amenable to laser hardening. Thus, alloy and tool steels are particularly easily treated whilst structures with widely dispersed carbide or graphite are less so. Nonetheless, one of the largest scale (15 lasers) of the many examples of laser hardening on a production line concerns ferritic malleable iron.(5) This structure, consisting of nodules of carbon in a ferrite matrix is not readily hardened without distortion by conventional techniques. The high surface temperature associated with the laser process does however result in the carbon being dissolved in a thin surface layer which is fully martensitic on quenching.

This application by General Motors, USA is also important in establishing the concept of wear patterns rather than all-over hardening; the component in question is an automotive power steering unit with a bore (89 mm diameter by 152 mm long) subject to sliding friction. Wear resistance is provided by scanning a 1 kW laser beam to produce five equispaced tracks, each about 2 mm wide, on the wall of the cylinder, parallel to its axis.

General Motors are now taking delivery of a number of 5 kW lasers for similar hardening applications.

Automotive component hardening, featuring high volume production and/or requirements of minimum distortion, is a prime candidate for laser processing, and the field is being actively investigated by a number of groups including our own.

4. SURFACE TREATMENTS INVOLVING MELTING

4.1 Cladding

Surface cladding or coating is employed when localised corrosion or wear resistance is required on a component having a composition not inherently capable of producing those properties. Conventional heat sources, for example flames or plasmas, may be used to fuse a layer of alloy on to a substrate, and a laser may be used in an analogous manner but with the following potential advantages associated with the greater controllability of the heating:

(a) optimisation of coating geometry so that additive usage and distortion is reduced;

(b) minimised melting of substrate so that dilution is reduced;

(c) fast cooling rates offer possible control of microstructure.

Accordingly, the laser beam is operated in a high power density regime and is rastered or focused to create the required width of cladding band. The cladding alloy is preferably added in powder form since the supply can be more readily matched to the geometry of the beam. Alternatively the laser may be considered as a means of improving the integrity (homogeneity, adhesion) of existing overlay coatings applied by, for example, spray bonding or electro-chemical techniques.

Our preliminary investigations have involved the cladding of elements (in powder form) such as aluminium, chromium, molybdenum and nickel, and of Stellite alloy on to steel substrates. Fig.7 shows a car engine exhaust valve with a hard facing alloy on the seat deposited by a 4.5 kW laser beam; microhardness measurements at the working surface give a value of 600 HV; detailed technical and economic comparisons with other methods have yet to be carried out.

4.2 Diffusion of Alloying Constituents into Substrate

In 4.1 the aim was to deposit a working surface of composition undiluted by the substrate, whilst here the aim is to develop a surface of composition determined by both substrate and additive. By this means, very economical use is made of additives, but much more exact metallurgical guidance in their selection is required. Our work in this area is at a very early stage, but we have observed some encouraging results when using the laser in a manner similar to that of an electron beam in experiments(6) concerning the diffusion of elements like silicon and iron into aluminium alloys to increase surface hardness.

4.3 Rapidly Quenched Surface Layers

When focused to power densities in excess of $\sim 10^6$ W cm^{-2} lasers can produce on a substrate a thin melt layer which may experience quenching rates of order 10^6 ^oC s^{-1}. This is a regime of particular relevance to metallurgists working in the field of rapidly quenched metals(7) where similar cooling rates are routinely achieved by the sudden, intimate contact of atoms, ions, vapour or molten droplets or ribbons with a heat sink. The rapid quenching can result in supersaturated and metastable phases, such as supersaturated solid solutions and homogeneous microcrystalline structures; for example, tool steel undergoing such quenching may be shown to possess extremely high hardness. With careful choice of composition, particular substrates become amorphous on quenching, to yield metallic glasses. These may exhibit useful magnetic properties, high corrosion resistance, and in addition a unique combination of hardness and ductility.

Early experiments were carried out to produce such structures using pulsed lasers, but a recent innovation(8) involved use of a cw multikilowatt laser. Rapid scanning of the focused beam resulted in the creation on substrates of fine melt tracks exhibiting some of the above properties. Although the ability to effect microstructural modification is in itself of far reaching importance, there is particular interest in the prospect of creating on a component an amorphous corrosion resistant skin. The

method of 4.2 may be used to set up first of all an appropriate composition at the surface, but subsequent glazing using a large number of adjacent narrow laser scans is unattractive because the heat pattern from one will tend to recrystallise the structure of a preceding.
However it may be possible with sufficiently high power and a line focus to create wider glazed tracks in one pass.

It is interesting to note here a somewhat related use of lasers in the semiconductor field. One of the essential operations in implantation doping of semiconductors is thermal annealing of the doped layer, essential for the restoration of the crystal structure disturbed by the bombardment of the original single crystal and for the electrical activation of the implanted impurity. Conventionally the annealing is carried out by furnace, but recently it has been demonstrated(9) that pulsed lasers can be used to locally surface anneal just the implanted layer. The localisation is potentially of great importance in the fabrication of, for example integrated circuits and it may be that in some applications a rapidly scanned cw beam may offer some advantages.

5. WELDING

5.1 Introduction

Multikilowatt laser welding is a process of joining metal by the fusion of a deep, narrow, paralled-sided seam; it is thus energy efficient and capable of fabrication with minimum distortion.

When subjected to focused beams of intensity around 10^6 W cm^{-2}, the workpiece surface will experience a rapid temperature rise leading to increased absorption, possible oxidisation, and ultimately melting, vaporisation and disruption of the surface. The result is very efficient (up to 90%) coupling of the beam into the workpiece, the energy being deposited in a thin layer which is intensely heated and disrupted to form a hole which traps the beam. At beam powers of a few kilowatts, this 'keyhole' can be several millimetres deep, and is kept open mainly by the vapour pressure. In welding, relative movement of the beam and workpiece results in the keyhole being translated along the joint line, metal being melted ahead and flowing around to solidify behind it.

Some of the materials exhibiting good laser weldability are steels, titanium and its alloys, and nickel and its alloys. Much less readily weldable are copper and aluminium, mainly due to their high reflectivity to the laser wavelength; the latter is weldable but requires careful control of the inert gas shrouding.

5.2 Process

The welding process is being used and investigated by a large number of people using a variety of lasers. We will discuss it primarily by reference to our own equipment.

One of our welding heads (which may be moving or fixed) is shown schematically in Fig.8, where it is seen that the hollow beam permits use of a spherical focusing mirror without off-axis aberrations. It is very attractive to employ mirrors, which are robust and can be relatively cheaply refurbished, in the presence of welding spatter. Mirror height adjustment allows the position of the focus to be altered with respect to the workpiece surface. Using a switching mirror further up the beam line, an expanded, low power (visible) beam from a helium-neon laser can be reproducibly substituted for the CO_2 beam to simplify seam tracking.

Also shown in the figure is a typical workpiece gas shroud arrangement, the upper and lower 'shoes' being fed with a slow flow of inert gases to prevent oxidisation of the bead during cooling. The inert gas jet J excludes from the interaction point air which could support vigorous plasma-chemical reactions leading to oxidisation and considerable mechanical disruption of the upper bead. In addition it minimises, by the convective removal of energy, the plasma which tends to form at the interaction point and which would otherwise absorb and redistribute an excessive amount of the laser energy into a widened top bead. The processes in the plasma plume are influenced by the control gas, and by the metal ions and atoms emitted from the workpiece; helium, because of its higher ionisation potential, is preferable to argon, and at lower welding speeds (where indeed the workpiece emitting area tends to be large) plume control is more difficult. Obviously with appropriate adjustment, the momentum in the plume control jet begins to play an appreciable role in the formation of the keyhole and ultimately causes a transition to the cutting mode i.e. the process passes through a regime analagous to plasma welding.

The scaling of the maximum depth of weld penetration with beam power receives considerable experimental and theoretical interest. Preliminary conclusions indicate that for very deep welds at slow speeds, the beam intensity distribution and the plasma are important factors, both of which are more favourable in the case of a vacuum electron beam; the eb is inherently a much lower divergence source, and suffers less attenuation in the metal vapour. Nevertheless, at medium to fast speeds, laser penetration appears comparable with vacuum eb penetrations, and we tabulate some laser results at 3.6 kW beam power:

Continuous Full Penetration in Steel Plate at 3.6 kW			
Mild Steel		Stainless Steel	
Thickness mm	Speed mm s^{-1}	Thickness mm	Speed mm s^{-1}
6.3	18	6.7	15
4.8	36	5.2	35
2.0	130	3.2	80
1.0	220	0.9	220

For practical welds, some reduction in the speed improves the geometry of the fusion zone and eases alignment tolerances. Welds with high depth/width aspect are shown in Fig.9 and Fig.10. They are respectively sections of 4.8 mm mild steel welded at 4 kW and 30 mm s^{-1}, and 2.5 mm superalloy welded at 3 kW and 60 mm s^{-1}.

Because the medium to high speed regime shows the most potential for exploitation of laser welding, we have not systematically optimised the maximum penetration possible at a large number of powers. Nevertheless we show in Fig.11 a section of an 8 mm bead-on-plate weld in stainless steel carried out at 2.7 kW and 4 mm s^{-1}; this is close to the limit of penetration at this power, and potential users interested in this thickness would be recommended to work at higher power and speed where the sensitivity to process parameters is less, cf Fig.12 which shows a section of 10.7 mm low alloy steel welded at 7.2 kW, 10 mm s^{-1}.

Results from a number of lasers, including our own, indicate that in approximate terms the present maximum practicable depth of penetration d (mm) scales with laser power P (kW)

$$d \approx 3.7\, P^{0.6}$$

Taking into account the commercial availability of multikilowatt lasers and the power law of the scaling, it is seen that they should be considered for single-pass penetrations in steels up to about 15 mm. For deep penetration mode welding above this thickness, eb and nveb may be attractive, provided vacuum requirements and/or X-ray hazards are acceptable.

There are however many high volume applications in a range of industries requiring minimum heat input welds in thicknesses up to about 8 mm and it is in this area that lasers of powers up to 5 kW can most readily contribute.

5.3 Characteristics and Applications

Detailed questions about laser welding performance in alloys of interest to a potential user can only be answered after a careful assessment programme. Nevertheless, some guidance based on the characteristics of the process and the accumulating body of data, can be given. We have emphasised that a significant feature of the process is the minimum distortion; this follows from both the small melt volume and the parallel sided nature of the weld (so that expansions and contractions are in the plane of the material). As an important corollary, the reduced stresses will limit the incidence of cracking during and after welding. Furthermore, the process is particularly amenable to the welding of dissimilar metals and can cope with a reasonable mismatch of thermal properties.

A related feature is that heating rates, temperature gradients and cooling rates are high. Although high cooling rates may be undesirable in alloys of high hardenability, in some materials the resulting fine microstructure will exhibit excellent fatigue resistance properties. If hardening is unacceptable, it can be alleviated by pre- or post-weld heat treatment.

We have successfully used lasers to carry out post-weld heat treatment in specific geometries (thereby reducing hardness from 450 HV to 250 HV), and in principle a welding laser beam could be defocused to carry out the pre- or after-heat. Alternatively, undesirable metallurgical changes may be controlled and modified by the use of an appropriate filler.

Our investigations in this direction are at a preliminary stage and at present primarily concern the frequently encountered need to weld as-cropped edges. Fig.13 shows such a preparation before and after welding with filler. The parent material is 2.8 mm mild steel welded at 3.5 kW and 40 mm s^{-1}, and choice of a dissimilar filler emphasises the melt geometry and convection. In the absence of filler this preparation would have resulted in, at best, a weld with severe undercut and, at worst, the beam passing through with minimal interaction; oscillation between these two modes leads to 'stuttering'.

Finally the keyhole nature of the process leads to two characteristic effects. In the first, less desirable, we observe (in common with workers elsewhere) that non-fully-penetrating (blind) welds in a number of materials exhibit root porosity, which is almost certainly associated with collapse of the keyhole trapping some vapour. The effect is dependent on the power-speed regime chosen, but tends to disappear when fully penetrating welds are made. The effect is common to eb welding where it has been found amenable to control by spinning and oscillation of the beam; these techniques will be applied to laser beams in due course. The second, desirable, characteristic is that the laser can lead to a much reduced inclusion content in the weld zone, with mechanical properties correspondingly superior to the parent plate(10); it seems likely that the keyhole provides a route to vent the more vaporisable impurities from the melt.

The existence of one or more of the above favourable characteristics has led to the present use of many tens of lasers of powers ≥ 1 kW in production welding. Although some of the more well established of these have been extensively described in the literature, commercial security frequently precludes detailed discussion of the most recent and economically viable applications; it is probably most helpful to refer a potential user to the following table which lists existing and potential applications together with the salient characteristic(s) being exploited:

Welding Application	Characteristic Exploited
Dissimilar metal joining e.g. saw blade manufacture, fixing of valve seat inserts	Minimum thermal disturbance
Fabrication of stainless steel components e.g. washing machine drums, food bowls and trays	Fast, cosmetically acceptable
Fabrication of electrical cabinets	Hermetically sealed enclosures required
Lead battery fabrication	Fast, no drop out
Automotive components and body parts	Fast, minimum distortion
Joining stock length for strip mills	High integrity, clean bead profile
Fabrication of special section structural members	Cheaper than forming
Pressure vessel fabrication	Potentially high integrity and reproducible
Tube to tubeplate joining	
Tube to tube joining	

Figure 14 shows some sample welds relevant to the above applications: a butt joint in flat plate high yield steel (10.7 mm thick, 7.2 kW at 10 mm s^{-1}), a tube to tube joint in the same material (6.7 mm thick, 5.8 kW at 18 mm s^{-1}), a rectangular section fabricated from stainless steel (6.7 mm thick, 5 kW at 16 mm s^{-1}) and a simulated tube to tubeplate joint also in stainless steel (weld depth approximately 3.5 mm, 3 kW at 50 mm s^{-1}).

6. CONCLUSIONS

We have discussed some of the existing and potential applications of lasers of powers around 5 kW where the feature which is, or should be, exploited is the laser's unique ability to remotely deliver through atmosphere a controllable, high power density heat. Among the laser surface treatments, transformation hardening is finding commercial acceptance as a very fast process producing comparatively thin layers; cladding and alloying offer the potential for a greater controllability of localised surface modification whilst rapid quenching rates open up new possibilities in the creation of sophisticated structures. Deep penetration welding by laser offers a number of distinct advantages over other processes, and the capability appears well suited to the needs of a significant part of manufacturing industry.

The high process rates of the laser require that it be matched to high volume production lines; when the output exceeds demand, it can be readily switched to carry out a different process on a different line. Lasers of powers up to around 1 to 2 kW are now routinely used as production tools, where the upward trend of the powers of the lasers employed has been determined by the availability of reliable, cost effective, higher power machines and the growth of confidence in them by users. There seems no reason to doubt that conditions are right for this trend to continue.

ACKNOWLEDGEMENTS.

We wish to acknowledge the participation of A.F. Taylor and N.C. Obdeijn in parts of this work, and the interest of D.F. Jephcott and our colleagues in the Laser Applications Group.

REFERENCES

1. Licensee: Ferranti Ltd., Dunsinane Avenue, Dundee.

2. See for example: CLINE, H.E., ANTHONY, T.R. - J.Appl.Phys.48, 3895 (1977)

3. CARSLAW, H.S., JAEGER, J.C. - Conduction of Heat in Solids, Clarendon Press, Oxford (1959)

4. LANGOSZ, G.E. - Stefan Problem Solution Programme, unpublished.

5. MILLER, J.E., WINEMAN, J.A. - Metal Progress 38, (May 1977)

6. Schweisstechnik (Switzerland) 65, 265 (1975)

7. JONES, H. - Rep.Progress Phys.36, 1425 (1973)

8. BREINAN, E.M., KEAR, B.H., BANAS, C.M. - Physics Today 44 (November 1976)

9. SHTYRKOV, E.I., KHAIBULLIN, I.B., ZARIPOV, M.M., GALYATUDINOV, M.F., BAYAZITOV, R.M. - Sov.Phys.Semicond.9, 1309 (1976)

10. BREINAN, E.M., BANAS, C.M. - United Aircraft Research Laboratory Report R111087-2 (1975)

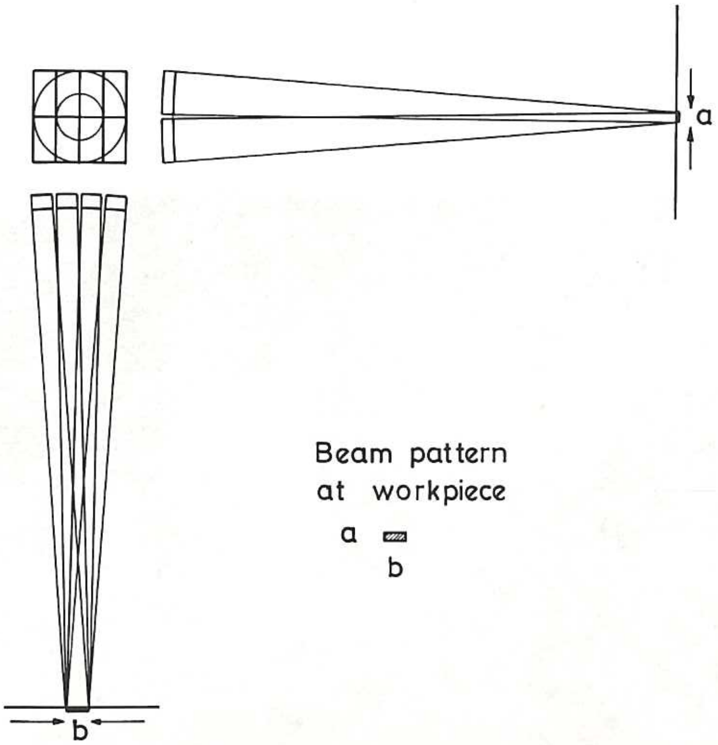

Fig.1 Use of a mirror consisting of eight cylindrical segments to scramble an annular beam into a rectangular heating pattern.

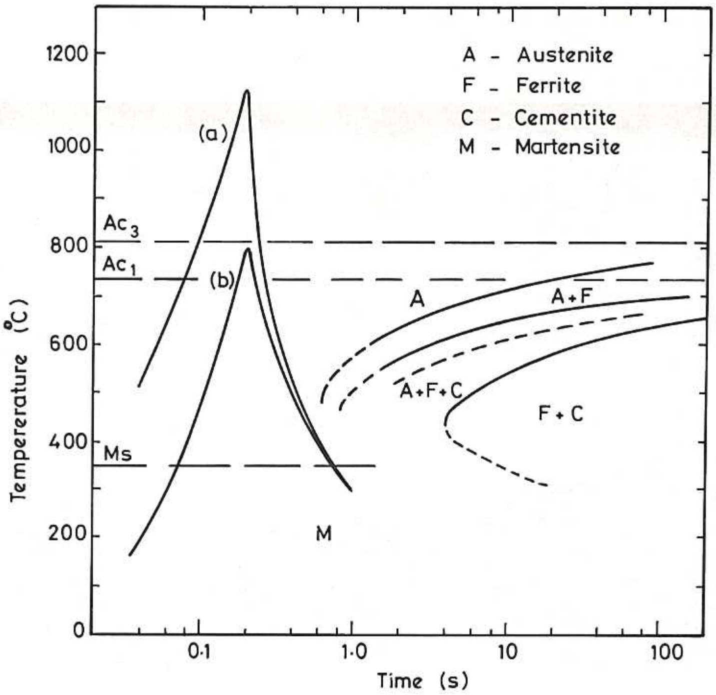

Fig.2 Isothermal transformation diagram for carbon steel with (superimposed) calculated temperature cycle at (a) surface and (b) depth 0.5mm for 10mm thick steel sample subject to a power density of 3×10^3 W cm^{-2} for dwell time of 0.2s.

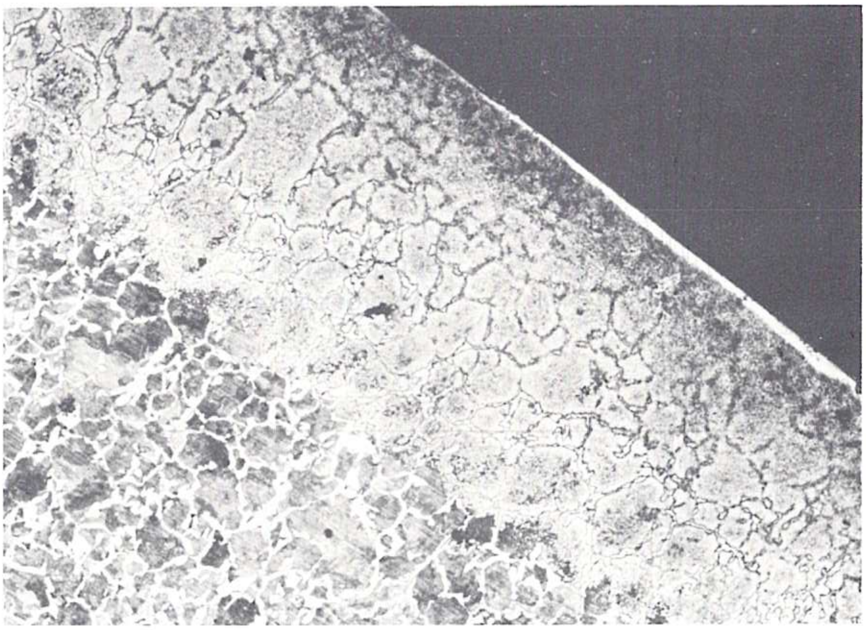

Fig.3 Micrograph of laser hardened layer (~ 0.5 mm thick) on 0.4% carbon steel.

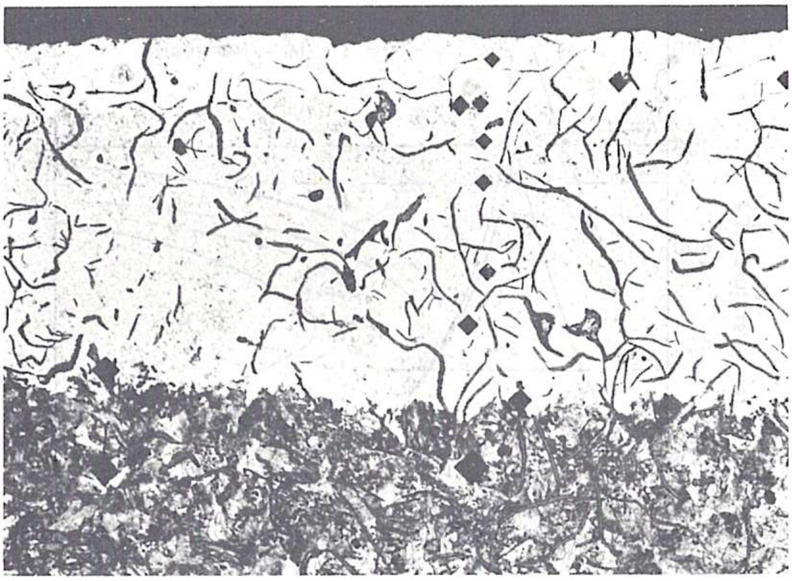

Fig.4 Micrograph of laser hardened layer (~ 0.5 mm thick) on pearlitic cast iron.

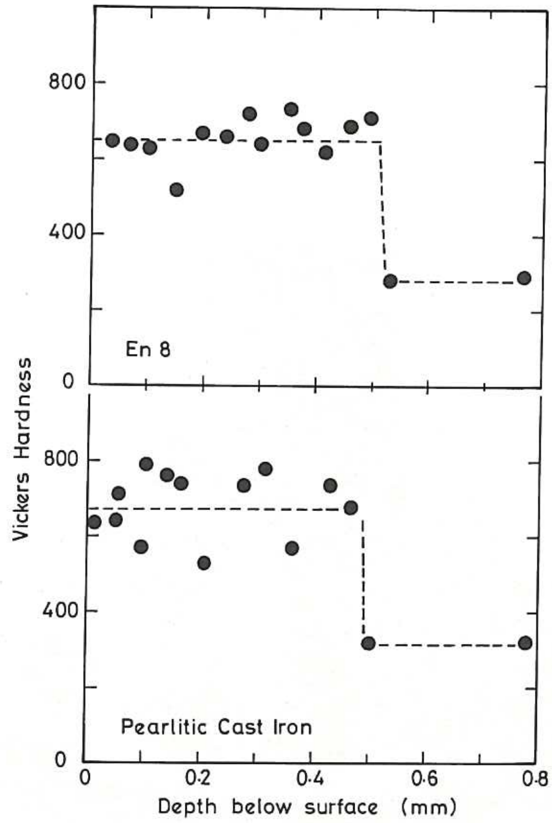

Fig.5 Typical microhardness scans in layers similar to those of Figs.3 and 4. Upper part 0.4% carbon steel, lower part pearlitic cast iron.

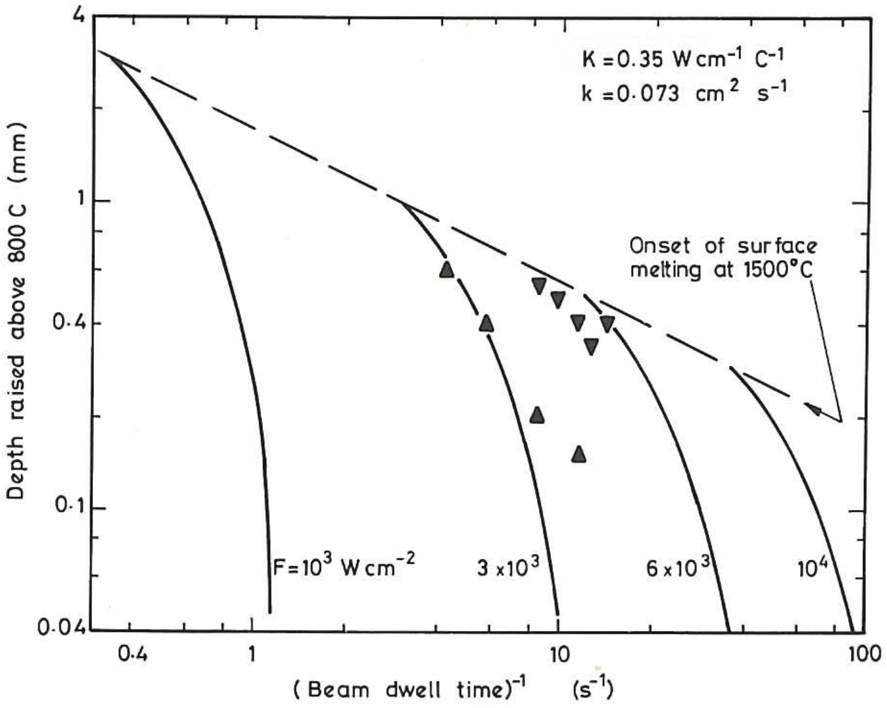

Fig.6 Calculated depth raised above 800°C as a function of reciprocal of beam dwell time, in carbon steel, for four values of absorbed flux. Data points are experimentally measured depth of hardening for flux values 3×10^3 (▲) and 6×10^3 (▼) W cm^{-2}.

Fig.7 Car engine exhaust valve with Stellite facing on seat deposited by 4.5kW laser beam.

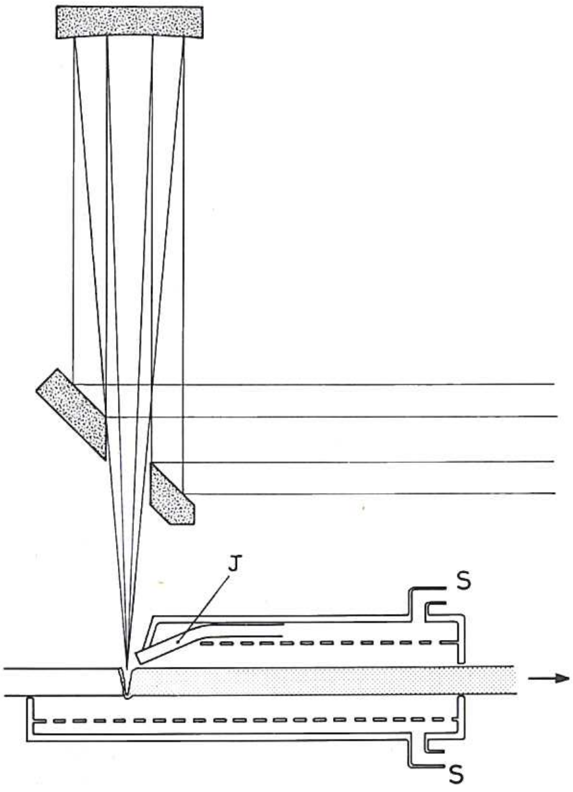

Fig.8 Schematic welding head.

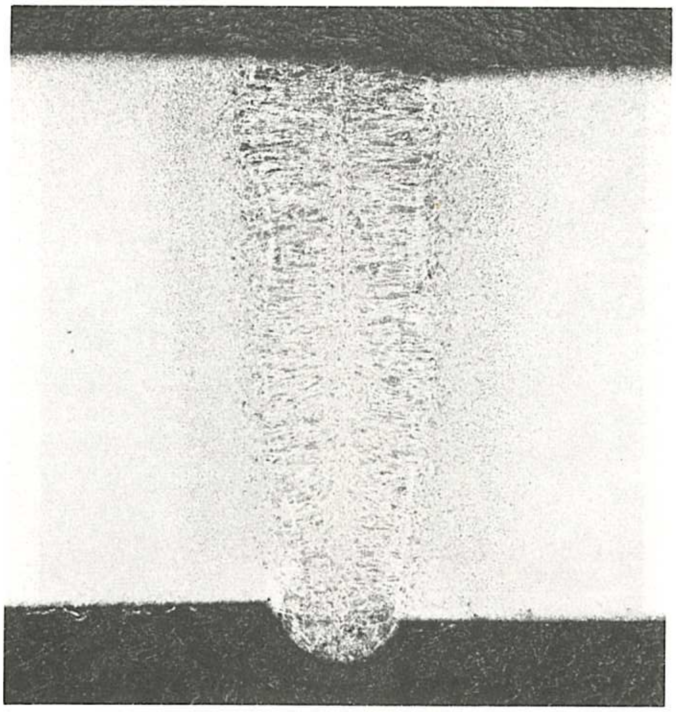

Fig.9 Laser weld in 4.8mm mild steel (4kW, 30mm s^{-1}).

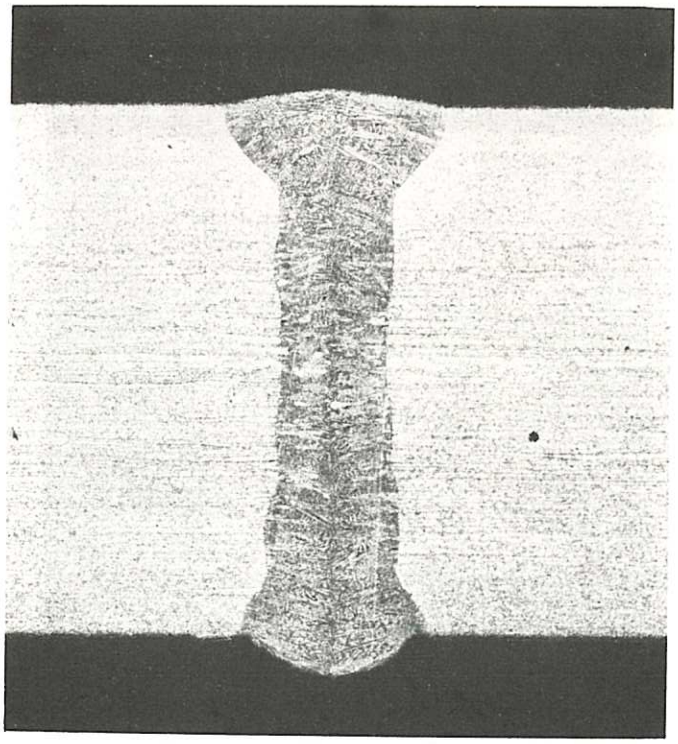

Fig.10 Laser weld in 2.5mm superalloy (3kW, 60mm s^{-1}).

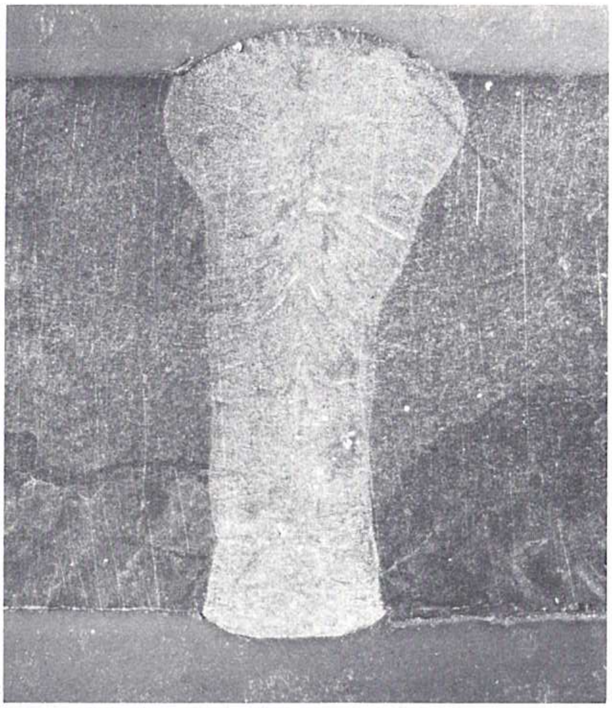

Fig.11 Bead-on-plate weld in 8 mm stainless steel (2.7 kW, 4 mm s^{-1}).

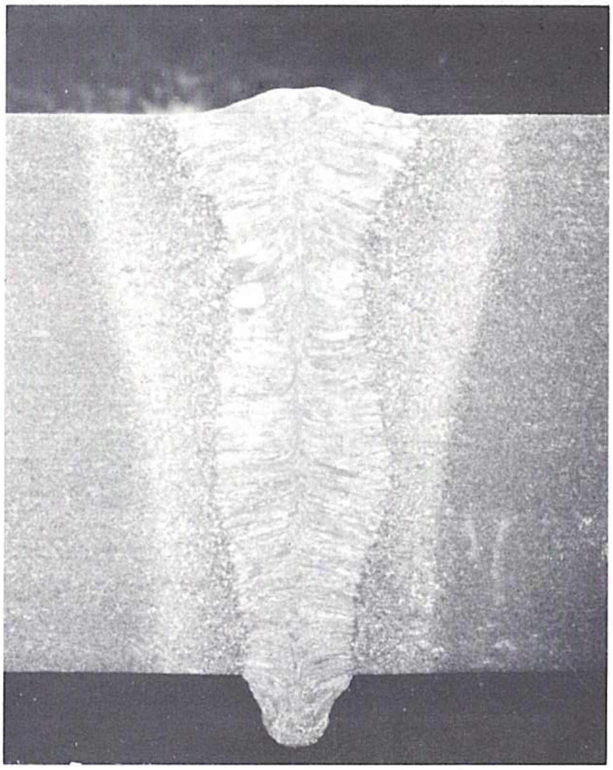

Fig.12 Laser weld in 10.7 mm low alloy steel (7.2 kW, 10 mm s^{-1})

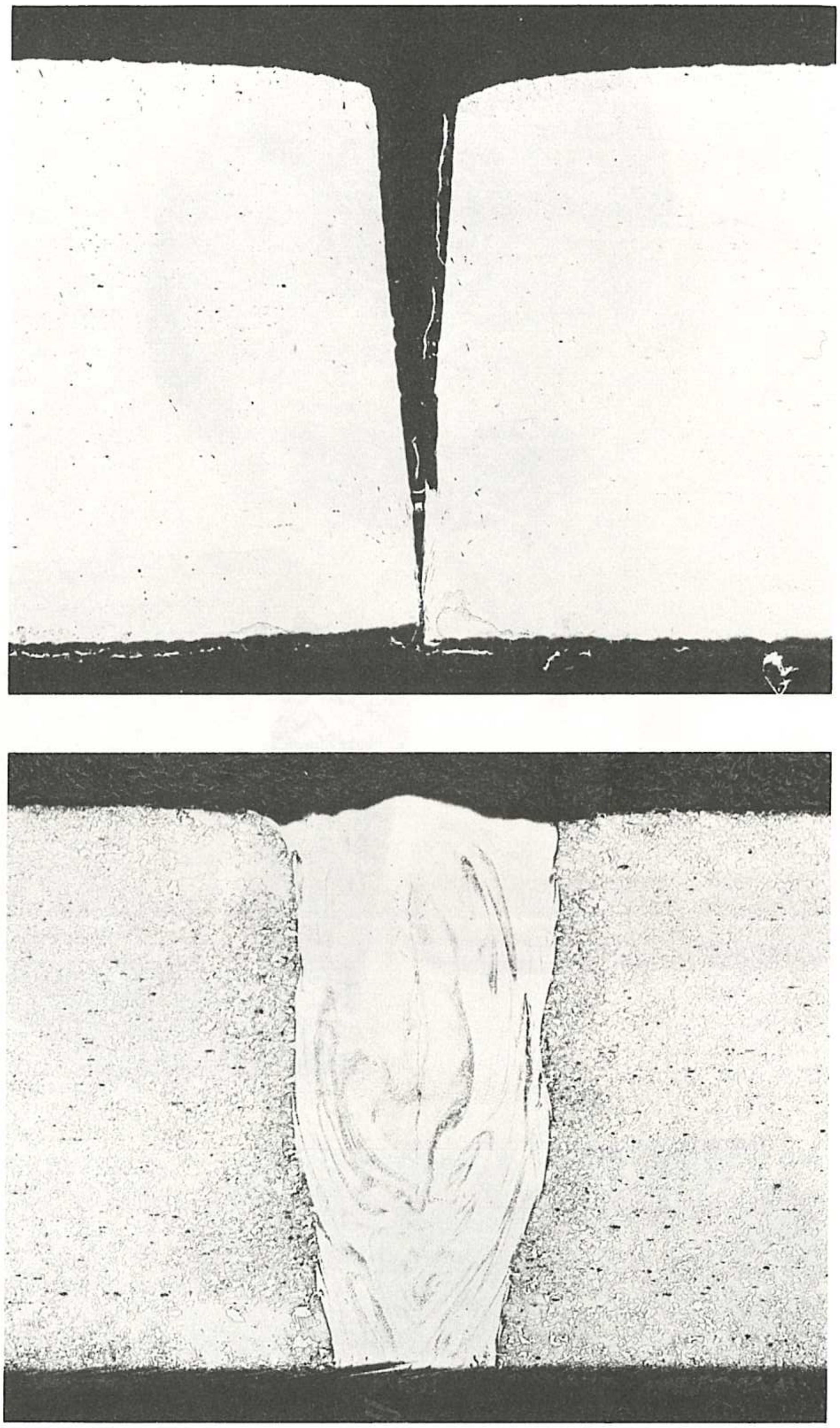

Fig.13 Laser weld in mild steel (3.5kW, 40mm s^{-1})
top, cropped edge preparation
bottom, final weld with use of filler.

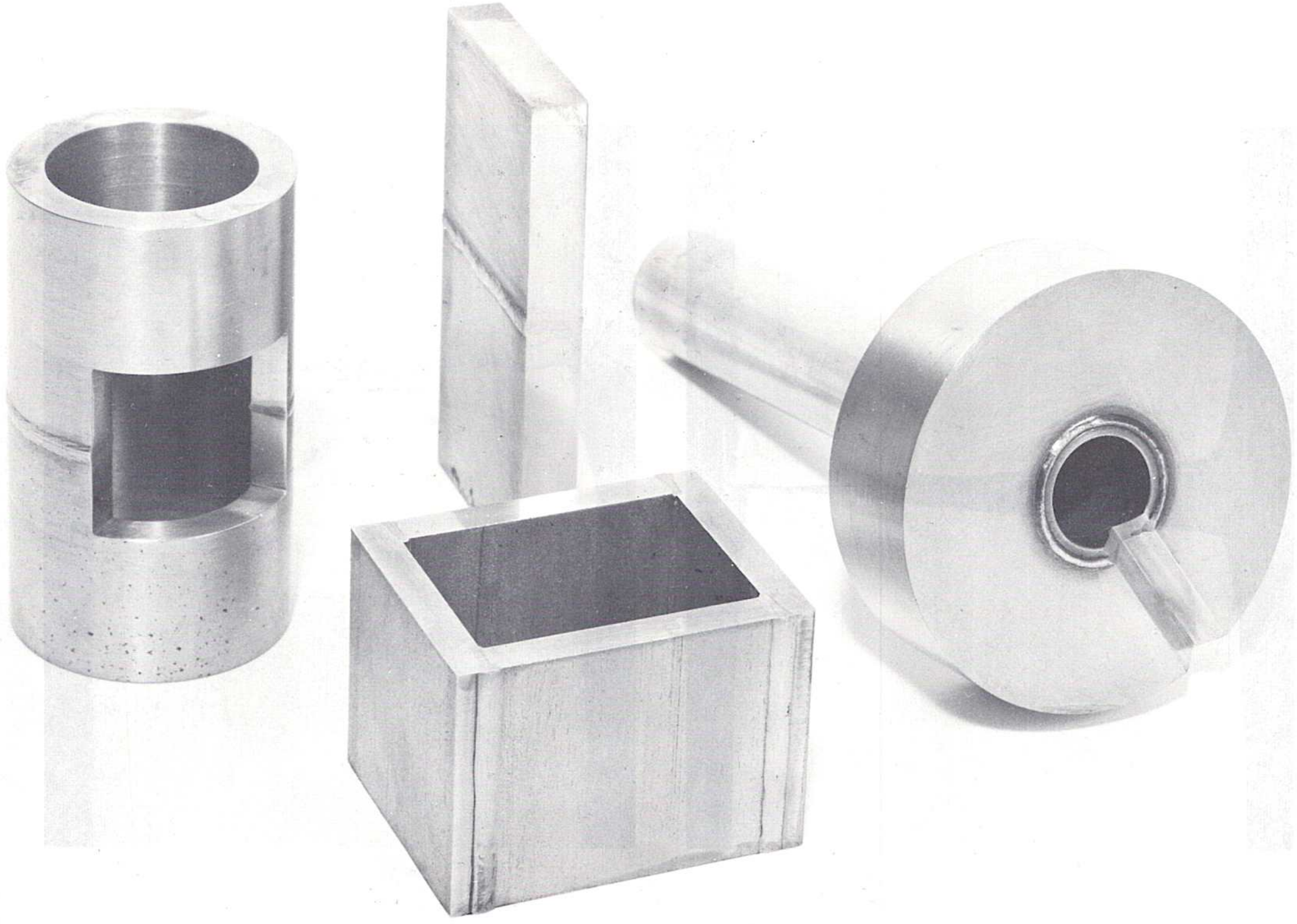

Fig.14 Sample welds – see text.

HER MAJESTY'S STATIONERY OFFICE

Government Bookshops

49 High Holborn, London WC1V 6HB
13a Castle Street, Edinburgh EH2 3AR
41 The Hayes, Cardiff CF1 1JW
Brazennose Street, Manchester M60 8AS
Wine Street, Bristol BS1 2BQ
258 Broad Street, Birmingham B1 2HE
80 Chichester Street, Belfast BT1 4JY

Government publications are also available
through booksellers