CCFE
CULHAM CENTRE FOR FUSION ENERGY

CCFE-PR(16)03

Thomas R. Barrett, G. Ellwood, G. Pérez, M. Kovari, M. Fursdon,
F. Domptail, S. Kirk, S.C. McIntosh, S. Roberts, S. Zheng,
L.V. Boccaccini, J-H. You, C. Bachmann, J. Reiser, M. Rieth,
E. Visca, G. Mazzone, F. Arbeiter and P.K. Domalapally

Progress in the Engineering Design and Assessment of the European DEMO First Wall and Divertor Plasma Facing Components

Progress in the Engineering Design and Assessment of the European DEMO First Wall and Divertor Plasma Facing Components

Thomas R. Barrett[a], G. Ellwood[a], G. Pérez[a], M. Kovari[a], M. Fursdon[a], F. Domptail[a], S. Kirk[a], S.C. McIntosh[a], S. Roberts[a], S. Zheng[a], L.V. Boccaccini[b], J-H. You[c], C. Bachmann[d], J. Reiser[e], M. Rieth[e], E. Visca[f], G. Mazzone[f], F. Arbeiter[b] and P.K. Domalapally[g]

[a]CCFE, Culham Science Centre, Abingdon OX14 3DB, United Kingdom
[b]KIT, INR, Hermann-von-Helmholtz-Platz 1, 76344 Eggenstein-Leopoldshafen, Germany
[c]Max Planck Institute for Plasma Physics, Boltzmannstr. 2, 85748 Garching, Germany
[d]EUROfusion, PPPT, Boltzmann Str. 2, 85748 Garching, Germany
[e]KIT, IAM, Hermann-von-Helmholtz-Platz 1, 76344 Eggenstein-Leopoldshafen, Germany
[f]ENEA, Unità Tecnica Fusione, ENEA C. R. Frascati, via E. Fermi 45, 00044 Frascati, Italy
[g]Research Cnter Rez, Hlavní 130, 250 68 Husinec – Řež, Czech Republical Laboratory

Progress in the Engineering Design and Assessment of the European DEMO First Wall and Divertor Plasma Facing Components

Thomas R. Barrett[a], G. Ellwood[a], G. Pérez[a], M. Kovari[a], M. Fursdon[a], F. Domptail[a], S. Kirk[a], S.C. McIntosh[a], S. Roberts[a], S. Zheng[a], L.V. Boccaccini[b], J-H. You[c], C. Bachmann[d], J. Reiser[e], M. Rieth[e], E. Visca[f], G. Mazzone[f], F. Arbeiter[b] and P.K. Domalapally[g]

[a]*CCFE, Culham Science Centre, Abingdon OX14 3DB, United Kingdom*
[b]*KIT, INR, Hermann-von-Helmholtz-Platz 1, 76344 Eggenstein-Leopoldshafen, Germany*
[c]*Max Planck Institute for Plasma Physics, Boltzmannstr. 2, 85748 Garching, Germany*
[d]*EUROfusion, PPPT, Boltzmann Str. 2, 85748 Garching, Germany*
[e]*KIT, IAM, Hermann-von-Helmholtz-Platz 1, 76344 Eggenstein-Leopoldshafen, Germany*
[f]*ENEA, Unità Tecnica Fusione, ENEA C. R. Frascati, via E. Fermi 45, 00044 Frascati, Italy*
[g]*Research Cnter Rez, Hlavní 130, 250 68 Husinec – Řež, Czech Republical Laboratory*

The European DEMO power reactor is currently under conceptual design within the EUROfusion Consortium. One of the most critical activities is the engineering of the plasma-facing components (PFCs) covering the plasma chamber wall, which must operate reliably in an extreme environment of neutron irradiation and surface heat and particle flux, while also allowing sufficient neutron transmission to the tritium breeding blankets. A systems approach using advanced numerical analysis is vital to realising viable solutions for these first wall and divertor PFCs. Here, we present the system requirements and describe bespoke thermo-mechanical and thermo-hydraulic assessment procedures which have been used as tools for design. The current first wall and divertor designs are overviewed along with supporting analyses. The PFC solutions employed will necessarily vary around the wall, depending on local conditions, and must be designed in an integrated manner by analysis and physical testing.

Keywords: EUROfusion, DEMO, plasma-facing component, design

1. Introduction

The European DEMO power reactor is currently under conceptual design in the framework of the EUROfusion Consortium. This is a long-pulsed tokamak device demonstrating the technologies required for commercial exploitation of fusion and with a physics basis which is a realistic extrapolation from ITER [1,2]. The current fundamental plasma parameters, derived from system codes, are major radius ~9 m, aspect ratio 3.1 and a relatively low plasma normalised pressure of β_N~2.5 giving a fusion power output of 2 GW_{th}. Unlike any fusion device existing today, the reactor will be required to be self-sufficient in the breeding of tritium fuel, must demonstrate the potential for efficient power production, and must safely operate under high fluence 14 MeV irradiation and extreme particle fluxes [3]. As a result of these requirements, one of the most critical activities in the design of DEMO is the engineering of the plasma-facing components (PFCs) that cover the tokamak chamber interior.

To overcome this mission-critical design challenge, instead of incremental steps from current tokamak PFC designs a systems engineering approach is deemed essential [2]. At this pre-conceptual stage of the design of DEMO it is important to take an open-minded and initially divergent path towards exploring the design space, systematically assessing a large range of design options in order to gain understanding of the design problems and the most design driving parameters.

Of course, although inevitably a completely different design solution, lessons must be learned from the ITER PFC design experience [4]. ITER will lead to an improved understanding of plasma-facing wall loads, and in this sense may reduce the conservatism and uncertainty in the DEMO loads. Attention must also be paid to the ITER wall engineering, for example the PFC shaping, strategies for mitigating electromagnetic loads, and the qualification of the structure-armour bond.

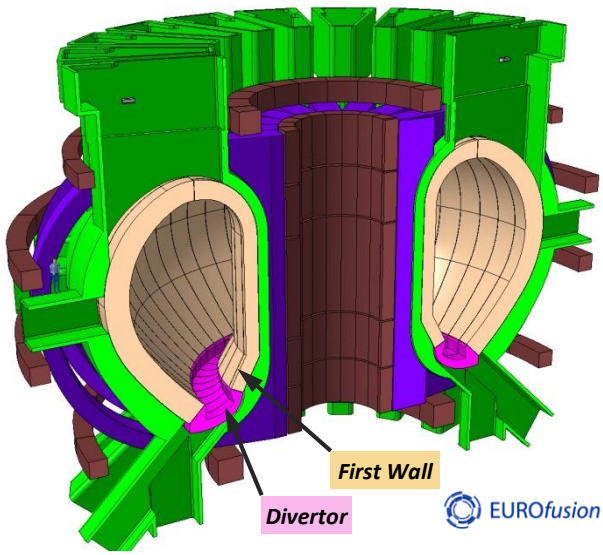

Fig. 1. 2015 EU DEMO baseline, highlighting the FW and divertor PFCs space allocation.

In this paper, recent progress in the design and assessment of the DEMO PFCs is reported. Bespoke thermo-mechanical and thermo-hydraulic analysis procedures are described which form the basis of

author's email: tom.barrett@ccfe.ac.uk

comparative design studies, results from which are subsequently presented. The scope of design activities herein is limited to the plasma-facing *target* components (surface armour, underlying cooling structure and its mechanical support). The blanket breeding unit (termed BB here), although situated in the main plasma chamber, is not considered a PFC herein (the breeding blanket design status is summarised in a parallel paper [5]). The PFCs considered are the main chamber first wall (FW) and limiter (progressed under the EUROfusion WPBB project), and divertor PFCs (WPDIV project). Their locations are identified in figure 1. The first step in the design process is the understanding of the system requirements, and the landscape of possible design options. This is described next.

2. DEMO PFC requirements and overall architecture

Functionally, the PFCs exist to ensure adequate plasma conditioning and to safely receive surface heat, which is exhausted via a coolant and then transmitted to the DEMO power cycle. At present there are large uncertainties surrounding the specification of surface loads [2,5,6]. Adequately specified "top down" requirements are currently almost inconceivable, and so a "bottom up" approach of establishing engineering limits of the PFCs is also necessary. A key example of this is the divertor heat load. In fully detached operation the surface power density at the divertor PFCs is expected to be in excess of 10 MW/m^2 [7], although it is perhaps double this during "slow transient" re-attachment events. On ITER, the W/CuCrZr target is specified nominally for 10 MW/m^2 heat flux, with some capacity to handle 20 MW/m^2 [8], but clearly the precise ITER design is not optimal in DEMO due to material radiation damage effects (which limit the structure temperature range) and the much more onerous duty cycle. Hence, solutions are sought which maximise heat flux handling ability while maintaining structural integrity.

From the point of view of engineering requirements and overall system concepts, it is useful to break down into three levels of design activity, as follows.

2.1 Wall surface shaping

The design of the plasma chamber wall must be steered with knowledge of plasma equilibria and also other loading scenarios such as start-up and ramp-down. To minimise the loading by energetic particles, the wall should, where practical, follow the magnetic flux surfaces but where it is not possible to be conformal (e.g. approaching the field nulls), flux lines should be crossed with a shallow incidence angle. Due to concerns over the response time of the plasma control system, a minimum of 225 mm is maintained between the wall and the plasma separatrix. Figure 2 illustrates a preliminary wall segment arrangement. Wall loading calculations, for example by field line tracing, are currently being conducted using this type of design, with a view to elaborating an engineering wall load specification for initially static, but ultimately also transient loads [7].

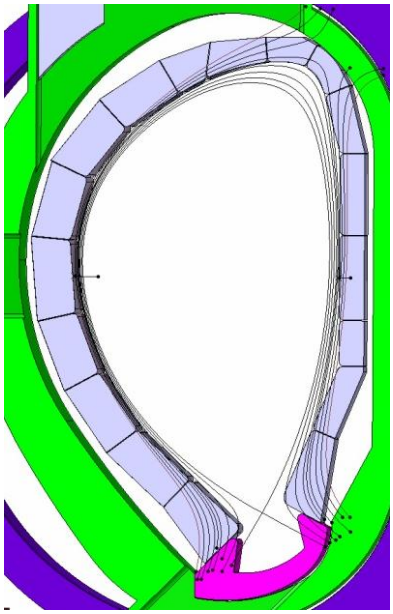

Fig. 2. Poloidal cross section showing DEMO wall surface layout and flux surfaces during the burn phase.

2.2 PFC system assemblies

2.2.1 Divertor cassette

The divertor is envisaged to comprise 54 cassettes arranged toroidally around the base of the main chamber [2]. Each cassette is designed to be exchanged by remote handling through the lower vessel ports [6]. The design critical PFCs are those on the vertical target surfaces (figure 3), which in principal receive the highest heat flux of all PFCs [4,7]. Features are also included for exhaust of neutral gas impurities to the vacuum pumping system.

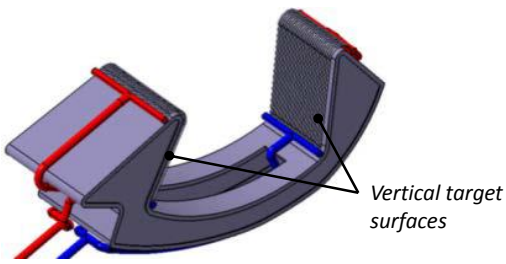

Fig. 3. Divertor cassette assembly.

Because of the extreme challenge of handling tens of MW/m^2 under a reactor environment and duty cycle, the divertor PFCs are cooled using water at 150 °C, 5 MPa. Water cooling in this regime gives excellent heat transfer performance, although a safe margin must be maintained to the critical heat flux (CHF). The coolant temperature is too low for efficient power conversion, but it is anticipated that the divertor power will be usefully transmitted to the power cycle via a pre-heater stage.

2.2.2 FW concepts

The FW, as on ITER, is a high heat flux component. The surface heat flux has been taken in past studies to be

in the region of 0.5 MW/m^2, with poloidal peaking ~1.2 [9]. This may prove to be an appropriate level for a uniform, normal scenario load; but peaked loads due to magnetic field ripple, plasma transients, wall dimensional intolerance, etc, could be an order of magnitude higher. Baseline FW concepts are based on helium and water cooling of EUROFER channels [10-14], which are reported to have heat flux limits of about 1 MW/m^2 and 1.5 MW/m^2, respectively. Importantly, these limits are based on engineering analyses however they neither account for irradiated material properties nor the presence of the tungsten armour. In reality the structure-armour bond could dominate the stress field.

It seems highly likely that, as on ITER, the design of PFC will necessarily need to vary with position around the wall. Indeed, for many years there have been different concepts for the FW and divertor. But further, as our understanding of the FW load distribution is improving, and given the major challenge of meeting the tritium breeding ratio (TBR) requirements [15], we must deploy specific FW PFC solutions to meet the local load conditions and other requirements. An example is at the top of the machine, where particle loads are expected to be higher than nominal due to the proximity of the secondary X-point. Specific top first wall (TFW) PFCs may need to be developed for this need.

As well as this heat load requirement, the DEMO FW (unlike ITER) must be designed to minimise its impact on the overall TBR and contribute heat to the reactor power cycle at reasonable efficiency. Simple balance of plant studies suggest that reasonable cycle efficiency implies a coolant outlet temperature of at least ~300 °C.

The FW and BB have inherently different functions. As identified by Federici [2], a critical decision in the FW design is whether to make it hydraulically and mechanically "integrated" in the breeding blanket box (as in the baseline design; see figure 4), or whether instead to make the FW a distinct ("de-coupled") component. The advantages and disadvantages of these schemes are portrayed in Table 1. The decision of which architecture to adopt must be led by increasingly detailed engineering design and assessment studies.

A further decision surrounds the use of limiters. Discrete limiters could perhaps be a strategy to withstand the highly peaked plasma loads that would otherwise strike the FW, while not excessively impacting the reactor TBR. They might also be used during plasma ramp-up and ramp-down, when a high wall load is expected (due to a limiter plasma configuration). Limiters were considered for ITER, but abandoned due to their complexity and difficulty handling the highly focused heat load. Instead, ITER uses a shaped wall [4] which acts both as a limiter for start-up and as the actively-cooled wall for normal operation.

Note that, regarding the maintenance scheme, the reference concept is that the FW will only be exchanged as part of the remote handling of the whole blanket segment. The ITER FW panels are designed to be individually exchanged by remote handling in-vessel. However, even one month into a DEMO shutdown the gamma dose in-vessel is predicted to be 2 kGy/hr, making a FW in-vessel replacement operation almost inconceivable [16]. Possible exceptions could be limited regions such as the TFW; by making this part of an upper port "plug" it might be exchanged while retaining the inboard and outboard blanket segments in place.

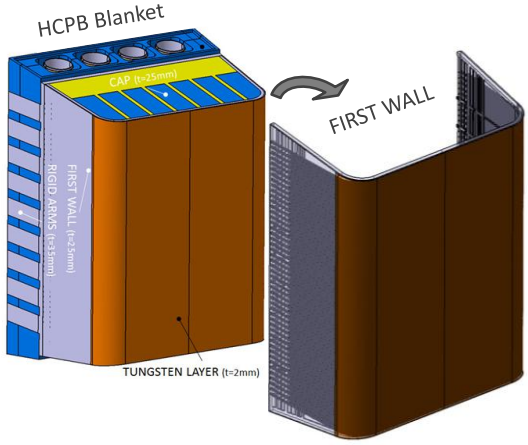

Fig. 4. Helium cooled pebble-bed (HCPB) blanket variant exhibiting an "integrated" FW (image courtesy of KIT).

Table 1. Advantages and disadvantages of FW architectures.

Option	"+" Advantages and "-" disadvantages
Mechanically and hydraulically integrated FW	
	+ relatively low impact on TBR
	+ relatively simple manufacturing
	- channel material is EUROFER, precluding other potential material options which may have benefits
	- high thermal stress in the BB wall
	- FW power handling constrained by coupled BB cooling condition requirements
If hydraulically separating the BB and FW	
	+ Highly fluctuating load on the FW is not translated into the (baseload power generating) BB
	+ Due to the loading uncertainties, power handling safety margin must be high on the FW but can be quite low in the BB (where the power input is much more predictable): better optimised flow regimes.
	+ More freedom to choose coolant and coolant regime (temperature, pressure) which could improve power handling
	- greater number of cooling pipes to the BB segment
If mechanically separating the FW from the BB	
	+ separation of the potentially highly loaded FW and the tritium containing BB could lead to an improved plant safety case (reduces risk of release of tritiated breeder into the plasma chamber).
	+ Allows a wider choice of structural material which could improve FW power handling (albeit perhaps at the expense of lifetime under irradiation)
	+ Lower thermal stress in the BB box wall. BB (a high investment item) is isolated from potentially destructive plasma events on the FW.
	+ De-coupled FW does not need to be designed for BB box over-pressure (Level D criteria).
	- Potentially high impact on TBR (greater thickness of material in FW)
	- Relatively high component complexity and cost

2.3. PFC requirements

2.3.1 Divertor PFCs

The baseline divertor PFC for DEMO is a variant of the ITER divertor, i.e., tungsten armour monoblocks surrounding a structural copper alloy (CuCrZr) cooling pipe [17]. This is shown diagrammatically in figure 5. CuCrZr is selected as it is unrivalled in its combination of thermal conductivity and strength; however, under irradiation it suffers embrittlement at ~150-200 °C and softening and creep at ~300-350 °C, and may only be useful for doses up to around 5 dpa [3]. However, as the divertor is a low fluence region (2-3 dpa/fpy), 2 fpy operation of the divertor is thought to be feasible. Tungsten is considered the most suitable armour material due to its refractory nature, good conductivity, very low sputter yield and low tritium retention. At least 5 mm of tungsten thickness is thought to be required at the plasma facing surface, to resist an erosion of ~2 mm/fpy.

Although low activation is desired, at present the need for a viable solution for the divertor overwhelms this. Copper would not be low activation, but the relatively small volume of waste arising from the target plates is taken to be acceptably low.

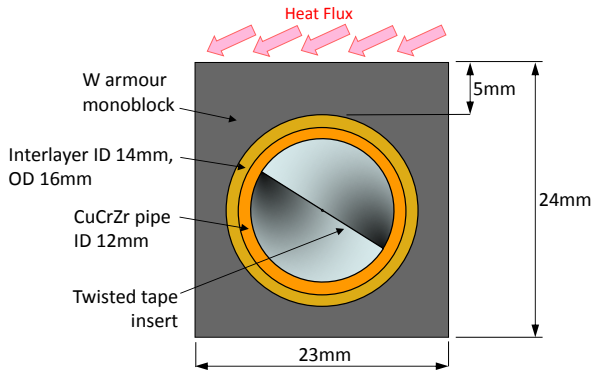

Fig. 5. Baseline water-cooled divertor target PFC concept.

2.3.2 FW PFCs

The FW topology and cooling channel technology [12,13] are currently an active design task and a function of the architecture as per Table 1. As in the divertor, the proposed FW armour material is tungsten, although it is expected that the thickness can be less; nominally 2 mm is assumed to be sufficient although this will vary with position around the wall. Due to the large volume of wall material, low activation in the timescale of 100 years is highly desirable. The present reference structural material is the reduced activation F/M steel EUROFER [14], which has good structural properties and resistance to irradiation damage, but the relatively narrow temperature range (~300-550 °C for the current grade) and low conductivity (28 W/mK at RT) limit the potential of this material under high heat flux. For this reason, in this programme also other FW structural materials are under evaluation using engineering analyses, methods of which are described next.

3. PFC design and analysis methods

The design of PFCs for DEMO requires the development of procedures for analysis and design exploration; two such methods are now described.

3.1 Standard thermo-structural analysis procedure

A significant issue to be resolved is by what method to assess the structural integrity of the PFCs. Nuclear pressure vessel design codes can be taken as guidance, but are found wanting as they neither consider multi-layer/multi-material structures nor stress due to manufacturing. Indeed the "design by analysis" approach adopted herein is clearly idealistic, and ITER have satisfied the need for design assessment by using the "design by experiments" approach [8] which is permitted in ITER SDC-IC [18]. For DEMO, the aim over the next 2-3 years is to develop absolute design criteria utilising elasto-plastic analysis, which is covered by the MAT-EDDI project of EUROfusion. This work will complement the high heat flux testing of mock-ups that is planned for 2016 and 2018. However, the immediate need to facilitate design optimisation was a standardised analysis procedure which can be used to rank the various concepts under assessment, and can be conducted by the many EU partners in a cohesive way.

Accordingly, a thermo-mechanical procedure has been developed specifically for monoblock-type PFCs. A simplified finite element (FE) model of the PFC is used to calculate the temperature and stress field, with the aim of determining reserve factors (margin to failure) for structural and thermal failure criteria. Ideally this procedure would make use of the ITER SDC-IC elastic design rules [18], as these are established for fusion components and evolved from the industrial RCC-MR code. However, the bonding of monoblock PFC materials at high temperature leads to considerable residual stress in the structure, which limits the number of applicable standard rules. The devised Monoblock Elastic Analysis Procedure (MEAP) applies two rules derived from differential stress, namely progressive deformation and fatigue. These rules, applied only to the structural pipe, are found to remain valid in the presence of residual stress. The MEAP also stipulates three thermal rules for the structure and armour. All five MEAP rules are summarised in Table 2. Note that there are currently no criteria for the interlayer, and no structural rules for the armour. Further, the MEAP method is intended for comparative design studies only; absolute failure assessment is not attempted but will be addressed via the aforementioned MAT-EDDI criteria.

The MEAP FE model is of a single monoblock with boundary conditions that allow the model to closely represent a full target assembly. A uniform heat flux (typically 10 MW/m^2 for divertor studies) is applied to the plasma facing surface. To apply rule 1, stress linearization is required and classification lines are made radially at a number of points to try to capture the worst case. The coolant heat transfer coefficient and CHF are calculated as a function of local wall conditions using standard empirical correlations.

Material property data are taken from the ITER SDC-IC [18]. The structural material and armour are assigned linear elastic properties, so that conventional elastic material code rules can be applied. However, the interlayer (traditionally pure copper) is assigned a yield limit in order to give a realistic maximum stress that can be transferred between the structure and armour.

The structural assessment is made using the stress difference between the three possible load cases as listed in Table 3.

Table 2. Elastic analysis procedure (MEAP) rules.

MEAP rule	Rule details
Rule #1	Ratchetting – The intensity of the stress range in the structure should be less than $3S_m$, i.e., $Max(\overline{P_L + P_b}) + \overline{\Delta Q} \leq 3.S_m(T_m)$ [18]*. Requires material S_m data [18].
Rule #2	Fatigue – following IC3132.3.1 from [18]. Requires material cyclic σ-ε and ε-n data [18].
Rule #3	For a CuCrZr channel, maximum temperature <300 °C to avoid creep and softening under irradiation.
Rule #4	Maximum wall heat flux < device CHF
Rule #5	Maximum tungsten armour temperature <1800 °C; this rule aims to maintain some thickness of tungsten below the recrystallization temperature (assumed to occur above 1300 °C).

* Nomenclature: S_m allowable primary membrane stress intensity; P_L local primary membrane stress; P_b local primary bending stress; ΔQ range of secondary stress (membrane+bending); T_m mean temperature through the relevant pipe section.

Table 3. MEAP load cases considered.

Load case	Description
A	Shutdown: no internal pressure and all parts at RT
B	Standby: full coolant pressure (when determining primary stress) OR all parts at coolant temperature (secondary stress)
C	Plasma heat load: plasma heat flux applied along with convective cooling

3.2 Thermo-hydraulic analysis tool

Thermo-hydraulics is a critical area for analysis in this pre-conceptual phase, particularly for the FW which must transfer the deposited heat at a temperature useful for thermodynamic efficiency. Further, since hydraulically de-coupling the FW from the BB is considered, it is prudent to explore possible new thermo-hydraulic conditions, coolants and channel designs. As part of project WPBB, a flexible tool has been developed which calculates the temperature and stress field in PFC channels based on input parameters for geometry, coolant conditions and heat flux. This tool is termed Thermo-Hydraulic Analysis Model for heat flux Exposed Surfaces (THAMES). Scripted in Python, THAMES first uses analytical and empirical formulae to calculate the evolution of fluid conditions, pressure drop, and the spatially-varying heat transfer coefficient (HTC), after which the code launches batch ANSYS runs for the calculation of channel structure temperatures and basic stress field (2-D plane stress). In the case of water local boiling, THAMES detects this automatically and applies the correct correlations in order to obtain the CHF as a function of the wall temperature. Each solve of THAMES is approximately 20 seconds duration, giving the potential for large parametric design searches. The code is able to explore different geometries, materials and coolants at different conditions, including gases, liquids and water with local boiling. It gives the option to choose different channel technologies: rectangular channels, circular smooth tubes or swirl tubes.

THAMES is intended for studies of a mechanically de-coupled FW, i.e., one in which the FW is split into multi-channel plasma-facing units or 'fingers'. Typically, two channels are assumed per finger, although we also define a parameter, n, which is the number of series connected cooling channels per circuit (FW inlet to outlet), see figure 6.

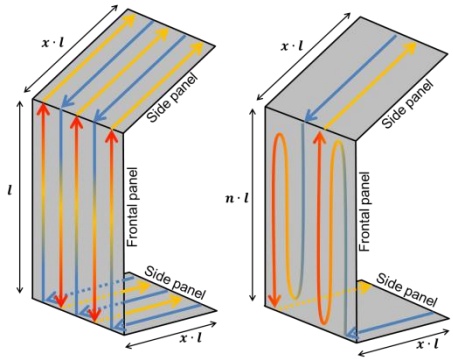

Fig. 6. Reference FW cooling circuit (left) and alternative cooling scheme where n=3 (right).

4. Current PFC design concepts and supporting analyses

4.1 Divertor target concepts and analysis

The suite of divertor PFC concepts currently being investigated in WPDIV is listed in Table 4. The design intent is to improve the structural reserve factor by enhancing the structural material high-temperature strength, or to use techniques to reduce stress in the structures. A more detailed account of the status of the divertor design is given in a parallel paper [17].It is important to note that, while WPDIV is primarily an engineering project, significant PFC material R&D is required to develop, characterise and qualify some of the materials listed in Table 4. Within EUROfusion such development is ongoing within the WPMAT project.

Table 4. Divertor target PFC concepts considered.

PFC Concept	Pipe	Interlayer	Monoblock
ITER-like	CuCrZr	Cu	W
Thermal break	CuCrZr	Cu felt/foam	W
Composite	W_{fibre}/Cu	Cu	W
Chromium	CuCrZr	Cu	Cr (W tile)
Graded W/Cu	CuCrZr	W/Cu	W
W laminate	W/Cu	Cu	W

A full assessment of all concepts in Table 4 is ongoing. Here, MEAP results for the Thermal Break concept are compared with an ITER-like design. The

concept of a Thermal Break divertor target was introduced in [19]. A CuCrZr structural pipe and W monoblock armour are used, but the interlayer between these is a relatively low conductivity and very low stiffness material or matrix. Using such an interlayer reduces the difference in strain between the structure and armour and significantly reduces the stress transmitted between them. In previous work it was shown that the very high compliance is more important for reducing structural stress than the low thermal conductivity [19]; however, the latter may play a vital role in heat redistribution around the pipe which can reduce the pipe peak temperature and heat flux.

The MEAP has been used to assess the potential advantages of a thermal break design as compared to an ITER-like design. The geometry used is the same for both, and is shown in figure 5. The monoblock axial thickness is 4 mm. In the ITER-like design the interlayer is pure copper, whereas the thermal break design uses an interlayer with conductivity k=60 W/mK and elastic modulus E=1.3 GPa. The applied surface heat flux is 10 MW/m^2 (although higher heat flux handling is desirable for robust operation, 10 MW/m^2 is taken to be the basic requirement).

Table 5. ITER-like and Thermal Break PFC MEAP results.

MEAP Rules and minimum reserve factors over 3 load steps, using **10 MW/m^2** heat flux	ITER-like	Thermal Break
1. Ratchetting (3S_m)	0.95	1.49
2. Fatigue	2.27	33.3
3. Pipe max temp	1.04	1.06
4. Wall peak heat flux	2.88	2.99
5. Armour max temp	2.07	1.74

The MEAP results are summarised in Table 5. Both designs are broadly acceptable at the 10 MW/m^2 heat load although the ITER-like design marginally fails rule 1. The thermal break design has an improved margin for rule 1 by around 50%, clearly confirming that structural performance is enhanced. Note that both designs are effectively limited to 10 MW/m^2 by the pipe maximum temperature (rule 3), although the temperature and wall heat flux reserve factors are slightly higher for the thermal break design due to the heat redistribution effect.

Of course, this is a simple comparison of just two design variants with nominal geometry and further optimisation is required for each in isolation (akin to [19]). The thermal break concept is untried, and requires a programme of fabrication R&D and testing. Potential practical solutions for a thermal break interlayer are copper felt or foam; these materials are currently being evaluated but appear to have properties in the range of interest [19]. Also, while the concept shows good potential, what remains is to devise the best way to rigidly support the PFC structure and armour while including between them a thermal and structural break.

4.2 FW target concepts and analysis

4.2.1 FW structural materials

As already mentioned, EUROFER is the baseline structural material for the FW, and has many compelling advantages [14]. However, it is prudent to consider other materials which might be unsuitable as the BB material but worthy candidates for a de-coupled FW. Some materials that may be of interest are listed in Table 6 along with salient properties. Included are the activation after 100 years (Clearance Index) and the impact of each material on the overall TBR, which have been calculated using a neutronics model of the reactor featuring the HCPB BB, He coolant and a FW of varying material.

Zirconium and its alloys have some very interesting properties. Zirconium has an extremely low neutron capture cross section, leading to a TBR which is actually higher than if the FW were not present (ΔTBR is positive). Low elastic modulus (E) and thermal expansion (CTE) lead to low intrinsic mechanical stress, and an excellent mechanical compatibility with the tungsten plasma-facing armour. There is also a long history of its use in a high radiation environment as fuel cladding in fission reactors, so its response to radiation damage, at least to fission-spectrum neutrons, has been investigated to some extent and there is a well populated material property database (e.g. RCC-MR). The activation of Zr is not very low but may be low enough to avoid permanent waste disposal. Although it is refractory, Zr thermal conductivity (k) is low, which in the FW leads to high temperatures. However, a problem with the current standard "Zircaloy" types is that they are not intended for high-temperature use, and their strength and creep resistance might be inadequate under fusion reactor conditions. Nevertheless, the potential advantages of Zr may warrant deeper investigation into bespoke alloys which overcome the apparent issues.

Table 6. Comparison of candidate FW structural material properties (at RT) [14,20,21]. The colouring shows a ranking of the materials by property (red: “worst”; green: “best”).

Material	E (GPa)	CTE (με/°C)	k (W/mK)	IAEA Clearance Index (at 100yrs)	ΔTBR *
EUROFER 97	217	10.3	28.3	67440	-0.068
Zircaloy-4	96	6.0	12.6	198000	+0.017
Ducropur (Cr)	279	8.4	90.0	10200	-0.081
V-4Cr-4Ti	126	9.3	30.4	*TBD*	-0.010

*ΔTBR is based on the elements Fe, Zr, Cr and V, not the alloys listed.

4.2.2 FW concepts

As already stated, it is likely that the type of FW PFC will vary with poloidal position around the machine. The baseline design is the integrated FW, an example of which is shown in figure 7. This has the advantage of a low impact on TBR but the heat flux handling is compromised by the need to withstand a BB box over-pressure (accident) event and a large thermal gradient stress. The FW in this case would be EUROFER steel.

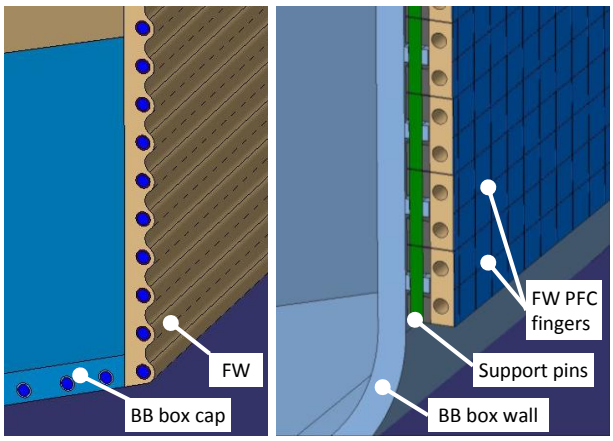

Fig. 7. Integrated FW design [11] (left) and proposed de-coupled FW composed of 'fingers' (right).

An alternative concept is the de-coupled FW, illustrated in figure 7. This design does not receive heat or pressure forces from the BB box. The FW is split into PFC fingers, largely motivated by the need to limit electromagnetic forces but this splitting also significantly reduces the thermal gradient stress. A preliminary plane-stress analysis has shown that, under 0.5 MW/m^2 surface heat flux, the highest membrane+bending stress is 453 MPa (reserve factor 1.04 using MEAP rule 1) in the baseline integrated HCLL FW design [10] whereas this can be reduced to just 153 MPa (reserve factor 2.9) if the same FW geometry is split into fingers. Because the FW heat flux limit is determined by structural stress, the stress reduction by using fingers will likely yield improvements in power handling. Castellated tungsten armour tiles are bonded to the surface of the fingers. These PFCs are attached to the BB box via a series of locking pins, avoiding the use of welding. Of course, a de-coupled FW as shown in figure 7 will likely have a negative impact on reactor TBR. This neutronic assessment, and other aspects such as finger alignment, heat transfer from the locking pins and electrical grounding, have not yet been demonstrated and must be an integral part of future design studies.

PFC concepts are also being proposed for the TFW and limiters. These components could be designed for improved power handling because TBR impact and power conversion efficiency are much lower priorities. For example, they may use thick tungsten armour, or adopt the monoblock design. Previous work has shown that a monoblock with EUROFER structural pipe can sustain a surface heat flux of up to 10 MW/m^2 [22]. Another option is that these PFCs may use the same 150 °C water coolant as the divertor, with obvious benefits to heat transfer. The material option for the TFW is open, but copper alloys are only considered if regular replacement is feasible (e.g. every 2 fpy).

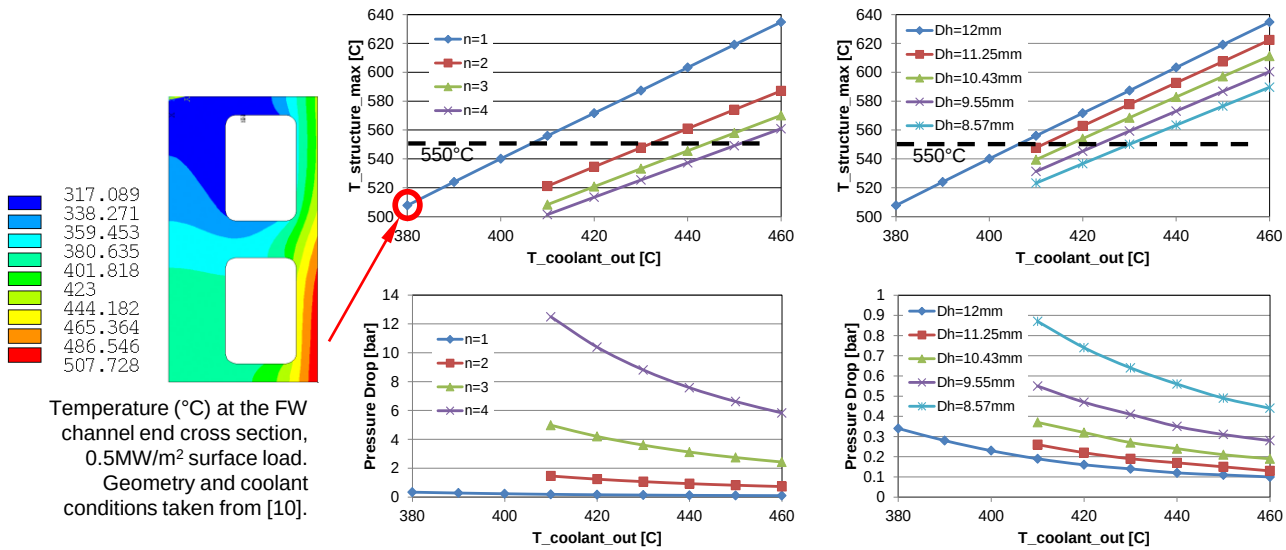

Fig. 8. Study of FW coolant outlet temperature, varying the number of series channels (*n*) and the channel hydraulic diameter (D_h).

4.2.3 Thermo-hydraulic study of a De-coupled FW

The application of THAMES is here demonstrated using an example study. For power cycle efficiency, it is desired to increase the He coolant outlet temperature (nominally 300-380 °C [10]) but in doing so maintain the maximum temperature in the EUROFER structure below the assumed upper limit of 550 °C. Different strategies may be applied to achieve this. First, it is possible to increase the length of each cooling circuit by connecting channels in series (increasing *n*), which increases the mass flow rate and the velocity in each channel but as a consequence the pressure drop is much higher; see figure 8. As an alternative, it is possible to simply reduce the hydraulic diameter of the channel, which causes a significant increase of the heat transfer coefficient without increasing the pressure drop as much, see figure 8. Either of these strategies (i.e. n=2 or D_h=8.5 mm) achieve a ~25 °C increase in outlet temperature with only a small (<1 bar) increase in pressure drop. Further studies and optimisation are ongoing with THAMES as an integral part of the FW design development.

4.2.4 Thermo-structural analysis of a de-coupled FW

Lastly, preliminary results are reported of a MEAP-type analysis of the de-coupled finger PFC shown in figure 7. The FE analysis model is setup following the MEAP approach; a sub-model is used (figure 9) with

boundary conditions representing a long length of finger. The model includes the underside support lugs with sliding pins. The dimensions of the section of finger analysed are based on the HCLL FW design in [10], and the model is taken to be at the edge of the FW, with inlet He at 300 °C, outlet at 380 °C and HTC of ~8.1 kW/m^{2}K. The surface heat flux is 0.5 MW/m^2 applied uniformly.

Three material options have been run and assessed against MEAP rule 1, i.e. 3S_m. The results are presented in Table 7. The first is a EUROFER finger with no surface armour (figure 9), and as mentioned previously the splitting of the FW into fingers gives a relatively low thermal gradient stress (reserve factor 1.8). However, when 25x25x2 mm flat tungsten tiles are included (bonded) on the surface, the mismatch in material CTEs causes a considerable rise in stress in the EUROFER structure (reserve factor 0.96). As well as reducing structural integrity, this high interface stress could lead to failure of the structure-armour bond. Appropriate armour tile bonding techniques, and their qualification by testing, are under development in the WPBB project. Interestingly, the case using Zircaloy-4 channel material and bonded tungsten tiles foresees very low structural stress due to the close match in material CTEs (with reserve factor 2.5, despite the relatively low strength of Zircaloy). Unfortunately, the peak Zircaloy temperature is 530 °C, well above the range where creep is expected. Further study of these concepts and creep analyses are ongoing to establish their potential.

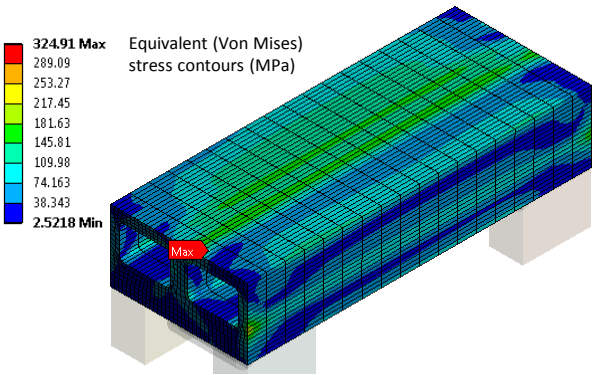

Fig. 9. De-coupled FW 'finger' FE analysis model.

Table 7. Thermo-structural analysis results for the de-coupled FW finger with three material combinations.

Design iteration	$Max(\overline{P_L + P_b}) + \overline{\Delta Q}$ (MPa)	3Sm (MPa)
1. EUROFER channels, no W tiles	254	468
2. EUROFER channels, with W tiles	495	476
3. Zircaloy-4 channels, with W tiles	53	132

5. Conclusions and Outlook

The engineering of the PFCs for DEMO is an extreme challenge. This paper has reviewed their overall requirements, described methods developed for PFC assessment and presented the status of the designs.

A range of divertor PFC concepts are under investigation, and in parallel an elastic analysis procedure has been devised to assess these concepts. According to the analysis, a viable concept for 10 MW/m^2 surface heat flux appears to be within reach, but a true assessment is pending development of an elasto-plastic method which aims for absolute assessment over a larger range of failure modes.

Due to the present uncertainty over FW heat loads, and the challenge of achieving tritium self-sufficiency, it is very likely that the FW PFC concept will need to vary around the wall. This mix of solutions could include plasma limiters and top panels near the upper field null. De-coupling the FW from the breeding blanket box may have advantages and splitting the FW into fingers has been shown to significantly reduce thermally-induced stress. Further, if the FW is de-coupled, the choice of structural material is open. These initiatives are expected to extend the FW heat flux limit. Mitigation of the high stress at the structure-armour bond remains a key issue.

Thermo-hydraulics is a critical area, and the tool 'THAMES' has been developed enabling rapid design exploration. Again on the assumption of a de-coupled FW, notable increases in outlet temperature have been shown as a result of changes to a reference design.

A fundamental remaining issue in the design of PFCs for DEMO is how best to account for the effects of intensely damaging neutron irradiation in the design process. This is made extremely complex by the clear need for 14MeV material testing facilities and the relative immaturity of relevant material property databases. Designing using irradiated material property data, from design codes and other sources, will be essential and this should be coupled with appropriate statistical methods for dealing with uncertainty and the effects of brittle materials (e.g. tungsten). Designers must work in conjunction with the WPMAT project, both on the side of PFC material development and in the MAT-EDDI project for material data and design criteria definition.

In the future, it will be vital to develop methods of DEMO PFC assessment, both by advanced "design by analysis" with associated elasto-plastic design criteria (c. 2017), and by a "design by test" approach. High heat flux tests of PFC mock-ups (divertor and FW) are planned from 2016, which must be conducted in a way to best exploit the results of analyses. Thermo-fluid experiments on the enhancement of cooling channel HTCs are also ongoing. With analysis, fabrication trials and experiments proceeding in an integrated manner and in conjunction with an expanding physics basis, we are advancing towards feasible PFC designs for DEMO.

Acknowledgments

This work has been carried out within the framework of the EUROfusion Consortium and has received funding from the Euratom research and training programme 2014-2018 under grant agreement No 633053 and from the RCUK Energy Programme [grant number EP/I501045]. To obtain further information on the data and models underlying this paper please contact

PublicationsManager@ccfe.ac.uk. The views and opinions expressed herein do not necessarily reflect those of the European Commission.

References

[1] F. Romanelli et al., Fusion Electricity: A roadmap to the realization of fusion energy, EFDA JG12.356, 2012.

[2] G. Federici et al., Fus. Eng. Des. **89** (2014), 882-889.

[3] D. Stork et al., Fus. Eng. Des. **89** (2014), 1586-94.

[4] R.A. Pitts et al., J. Nucl. Mater. **415** (2011), S957-S964.

[5] L.V. Boccaccini et al., Objectives and status of EUROfusion DEMO blanket studies, ISFNT-12, 2015.

[6] M. Coleman et al., On the EU Approach for DEMO Architecture Exploration and Dealing with Uncertainties, ISFNT-12, 2015.

[7] R.P. Wenninger et al., Nucl. Fusion **54** (2014) 114003.

[8] G. Pintsuk et al., Fus. Eng. Des. **88** (2013) 1858-1861.

[9] P. Sardain et al., Fus. Eng. Des. **69** (2003), 769-774.

[10] G. Aiello et al., Fus. Eng. Des. **89** (2014) 1444–1450.

[11] J. Aubert et al., Optimization of the first wall for the DEMO water cooled lithium lead blanket, Fus. Eng. Des. (2015), in press.

[12] F. Arbeiter et al., Thermohydraulics of helium cooled First Wall channels and scoping investigations on performance improvement by application of ribs and mixing devices, ISFNT-12, 2015.

[13] P.K. Domalapally et al., Assessment of Hypervapotron Heat Sink Performance using CFD under DEMO Relevant First Wall Conditions, ISFNT-12, 2015.

[14] R. Lindau et al., Fus. Eng. Des. **75–79** (2005), 989–996.

[15] U. Fischer et al, Neutronic performance issues of Breeder Blanket Options, ISFNT-12, 2015.

[16] O. Crofts et al., Overview of Progress on the European DEMO Remote Maintenance Strategy, ISFNT-12, 2015.

[17] J.H. You et al., Conceptual design studies for the European DEMO divertor: Rationale and first results, ISFNT-12, 2015.

[18] ITER Structural Design Criteria for In-vessel Components, ITER G-74-MA-8-01-05-28-W-0.2, 2012.

[19] T. Barrett et al., Enhancing the DEMO divertor target by interlayer engineering, Fus. Eng. Des. (2015), in press.

[20] U. Holzwarth et al., J. Nucl. Mater. **300** (2002), 161-177.

[21] RCC-MRx, Design and construction rules for mechanical components of nuclear installations, AFCEN, 2012.

[22] M. Richou et al., Fus. Eng. Des. **89** (2014), 975-980.